MODIFICATION HISTORY

MODEL NAME : KLV-32/40/46D300A, 32/40/46V300A, 40/46V380A

SERVICE MANUAL

PARTS No. : 9-834-157-04

* Blue characters are linking.

Ver.	DATA	CONTENTS
1.0	2007.06	Issued
1.1	2007.07	Addition of KLV-32D300A/40D300A/46D300A models. (P. 4, P. 5, P. 1-1, P. 2-1, P. 3-1)
1.2	2007.12	Addition of KLV-40V380A/46V380A models. (P. 1, P. 6, P. 1-7, P. 2-1, P. 3-8)
1.3	2008.02	Correction of disassembly for SEC 1. (P. 1-9) Correction of circuit boards location for SEC 2. (P. 2-1) Correction of part number for SEC 3. (P. 3-11)

Self Diagnosis
Supported model

KLV-32D300A/40D300A/46D300A
KLV-32V300A/40V300A/46V300A
KLV-40V380A/46V380A

SERVICE MANUAL

China Model

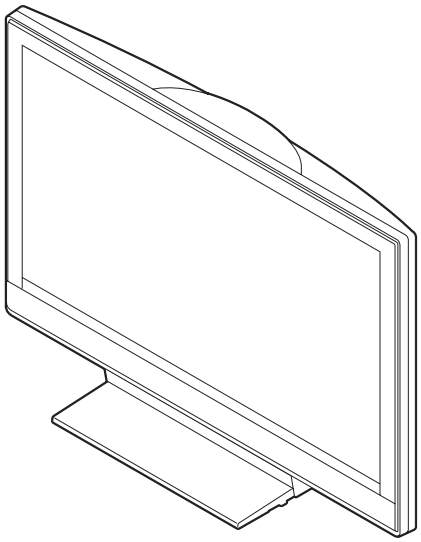

WAX3 CHASSIS

LCD Color TV

SONY®

SPECIFICATIONS

(1) KLV-32/40/46V300A

Model name		KLV-46V300A	KLV-40V300A	KLV-32V300A
System				
Panel System		LCD (Liquid Crystal Display) Panel		
TV System		D/K, I, B/G,M		
Colour System		PAL, PAL60, SECAM, NTSC4.43, NTSC3.58		
Channel Coverage		D/K: VHF: C1 to C12, R1 to R12/ UHF: C13 to C57, R21 to R60/ CATV: S01 to S03, S1 to S41, Z1 to Z39 I: UHF: B21 to B69/ CATV: S01 to S03, S1 to S41 B/G: VHF: E2 to E12/ UHF: E21 to E69/ CATV: S01 to S03, S1 to S41 M: VHF: A2 to A13/ UHF: A14 to A79/ CATV: A-8 to A-2, A to W+4, W+6 to W+84		
Sound Output		8.5 W + 8.5 W (as distortion of 7%)		
Input/Output jacks				
Antenna		75 ohm external terminal		
S 1, 2		S video input (4-pin mini DIN)		
1, 2, 3		Video input		
1, 2, 3		Audio input: 500 mVrms, 47 kilohms		
1, 2		Supported formats: 1080p (50/60 Hz), 1080i (50/60 Hz), 720p (50/60 Hz), 576p, 576i, 480p, 480i Y: 1 Vp-p, 75 ohms, 0.3V sync negative/PB/CB : 0.7 Vp-p, 75 ohms/PR/CR : 0.7 Vp-p, 75 ohms		
1, 2		Audio input: 500 mVrms, 47 kilohms		
		Video output		
		Audio output		
HDMI IN 1, 2		Video: 1080p (50/60 Hz), 1080i (50/60 Hz), 720p (50/60 Hz), 576p, 576i, 480p, 480i Audio: Two channel linear PCM 32, 44.1 and 48 kHz, 16, 20 and 24 bits Analogue audio input: 500 mVrms, 47 kilohms (HDMI IN 2 only)		
PC IN (RGB)		PC Input (D-sub 15-pin) (see page 34) G: 0.7 Vp-p, 75 ohms, non Sync on Green/B: 0.7 Vp-p, 75 ohms/ R: 0.7 Vp-p, 75 ohms/HD: 1-5 Vp-p/VD: 1-5 Vp-p		
PC IN		PC audio input (minijack)		
		Audio output		
		Headphones jack		
Power and others				
Power Requirements		220 V AC, 50 Hz		
Viewing Screen Size (diagonal)		117 cm (46 inches)	102 cm (40 inches)	80 cm (32 inches)
Display Resolution		1,366 pixels (horizontal) × 768 lines (vertical)		
Power Consumption		220 W	180 W	165 W
Standby Power Consumption		Less than 0.3 W		
Dimensions (w × h × d)	with stand (mm)	1114 × 782 × 306	981 × 696 × 265	790 × 581 × 214
	without stand (mm)	1114 × 730 × 115	981 × 643 × 110	790 × 530 × 100
Mass*	with stand (kg)	31	24	16
	without stand (kg)	26	20	14
Product usage condition				
Environment Temperature		5°C - 35°C		
Humidity		20% - 80%		
Air Pressure		86 kPa - 106 kPa		

* Mass are approximate values.

型号		KLV-46V300A	KLV-40V300A	KLV-32V300A
显示规格				
亮度 *		350 cd/m^2 以上 **		
对比度 *		150:1 以上 **		
可视角（L_0/3）*		水平 120˚ 垂直 80˚ 以上		
清晰度（电视线）*	RF 模拟信号	水平 350，垂直 400 线以上 **		
	SDTV	水平 450，垂直 450 线以上 **		
	HDTV	水平 720，垂直 720 线以上 **		
色域覆盖率 *		32 % 以上**		
运动图像拖尾时间 *		20 ms 以下 **		
声音特性 *		额定输入时声压总谐波失真 10 % 以下 **		

* 根据 SJ/T11348-2006 《数字电视平板显示器测量方法》。
** 该指标为 SJ/T11343-2006 《数字电视液晶显示器通用规范》之常温性能要求值。

Design and specifications are subject to change without notice.

PC Input Signal Reference Chart

Signals	Horizontal (Pixel)	Vertical (Line)	Horizontal frequency (kHz)	Vertical frequency (Hz)	Standard
VGA	**640**	**480**	**31.5**	**60**	**VGA**
	640	480	37.5	75	VESA
	720	400	31.5	70	VGA-T
SVGA	**800**	**600**	**37.9**	**60**	**VESA Guidelines**
	800	600	46.9	75	VESA
XGA	**1024**	**768**	**48.4**	**60**	**VESA Guidelines**
	1024	768	56.5	70	VESA
	1024	768	60	75	VESA
WXGA	**1280**	**768**	**47.4**	**60**	**VESA**
	1280	**768**	**47.8**	**60**	**VESA**
	1360	**768**	**47.7**	**60**	**VESA**

- This TV's PC input does not support Sync on Green or Composite Sync.
- This TV's PC input does not support interlaced signals.
- If input signal is not shown in above chart, then this signal may not be displayed properly or cannot be displayed according to your settings.
- For the best picture quality, it is recommended to use the signals (boldfaced) in the above with a 60Hz vertiical frequency from a personal computer. In plug and play, signals with a 60 Hz vertical frequency will be selected automatically.

(2) KLV-32/40/46D300A

Model name		KLV-46D300A	KLV-40D300A	KLV-32D300A
System				
Panel System		LCD (Liquid Crystal Display) Panel		
TV System		D/K, I, B/G, M		
Colour System		PAL, PAL60, SECAM, NTSC4.43, NTSC3.58		
Channel Coverage		D/K: VHF: C1 to C12, R1 to R12/ UHF: C13 to C57, R21 to R60/ CATV: S01 to S03, S1 to S41, Z1 to Z39 I: UHF: B21 to B69/ CATV: S01 to S03, S1 to S41 B/G: VHF: E2 to E12/ UHF: E21 to E69/ CATV: S01 to S03, S1 to S41 M: VHF: A2 to A13/ UHF: A14 to A79/ CATV: A-8 to A-2, A to W+4, W+6 to W+84		
Sound Output		8.5 W + 8.5 W (as distortion of 7%)		
Input/Output jacks				
Antenna		75 ohm external terminal		
S 1		S video input (4-pin mini DIN)		
1, 2, 3		Video input		
1, 2, 3		Audio input: 500 mVrms, 47 kilohms		
1, 2		Supported formats: 1080p (50/60 Hz), 1080i (50/60 Hz), 720p (50/60 Hz), 576p, 576i, 480p, 480i Y: 1 Vp-p, 75 ohms, 0.3V sync negative/PB/CB: 0.7 Vp-p, 75 ohms/PR/CR: 0.7 Vp-p, 75 ohms		
1, 2		Audio input: 500 mVrms, 47 kilohms		
		Video output		
		Audio output		
HDMI IN 1, 2, 3		Video: 1080/24p, 1080p (50/60 Hz), 1080i (50/60 Hz), 720p (50/60 Hz), 576p, 576i, 480p, 480i Audio: Two channel linear PCM 32, 44.1 and 48 kHz, 16, 20 and 24 bits Analogue audio input: 500 mVrms, 47 kilohms (HDMI IN 3 only)		
PC IN (RGB)		PC Input (D-sub 15-pin) G: 0.7 Vp-p, 75 ohms, non Sync on Green/B: 0.7 Vp-p, 75 ohms/ R: 0.7 Vp-p, 75 ohms/HD: 1-5 Vp-p/VD: 1-5 Vp-p		
PC IN		PC audio input (minijack)		
		Audio output		
		Headphones jack		
Power and others				
Power Requirements		220 V AC, 50 Hz		
Viewing Screen Size (diagonal)		117 cm (46 inches)	102 cm (40 inches)	80 cm (32 inches)
Display Resolution		1,366 pixels (horizontal) × 768 lines (vertical)		
Power Consumption		220 W	180 W	165 W
Standby Power Consumption		Less than 0.3 W		
Dimensions (w × h × d)	with stand (mm)	1114 × 782 × 306	981 × 696 × 265	790 × 581 × 214
	without stand (mm)	1114 × 730 ×115	981 × 643 × 110	790 × 530 × 100
Mass*	with stand (kg)	32	25	17
	without stand (kg)	27	21	15
Product usage condition				
Environment Temperature		5°C - 35°C		
Humidity		20% - 80%		
Air Pressure		86 kPa - 106 kPa		

* Mass are approximate values.

型号		KLV-46D300A	KLV-40D300A	KLV-32D300A
显示规格				
亮度 *		350 cd/m^2 以上 **		
对比度 *		150:1 以上 **		
可视角（L_0/3）*		水平 110° 垂直 80° 以上		
清晰度（电视线）*	RF 模拟信号	水平 350，垂直 400 线以上 **		
	SDTV	水平 450，垂直 450 线以上 **		
	HDTV	水平 720，垂直 720 线以上 **		
色域覆盖率 *		32 % 以上**		
运动图像拖尾时间 *		20 ms 以下 **		
声音特性 *		额定输入时声压总谐波失真 10 % 以下 **		

* 根据 SJ/T11348-2006 《数字电视平板显示器测量方法》。
** 该指标为 SJ/T11343-2006 《数字电视液晶显示器通用规范》之常温性能要求值。

Design and specifications are subject to change without notice.

PC Input Signal Reference Chart

Signals	Horizontal (Pixel)	Vertical (Line)	Horizontal frequency (kHz)	Vertical frequency (Hz)	Standard
VGA	**640**	**480**	**31.5**	**60**	**VGA**
	640	480	37.5	75	VESA
	720	400	31.5	70	VGA-T
SVGA	**800**	**600**	**37.9**	**60**	**VESA Guidelines**
	800	600	46.9	75	VESA
XGA	**1024**	**768**	**48.4**	**60**	**VESA Guidelines**
	1024	768	56.5	70	VESA
	1024	768	60	75	VESA
WXGA	**1280**	**768**	**47.4**	**60**	**VESA**
	1280	**768**	**47.8**	**60**	**VESA**
	1360	**768**	**47.7**	**60**	**VESA**

- This TV's PC input does not support Sync on Green or Composite Sync.
- This TV's PC input does not support interlaced signals.
- If input signal is not shown in above chart, then this signal may not be displayed properly or cannot be displayed according to your settings.
- For the best picture quality, it is recommended to use the signals (boldfaced) in the above chart with a 60 Hz vertical frequency from a personal computer. In plug and play, signals with a 60 Hz vertical frequency will be selected automatically.

(3) KLV-40/46V380A

Model name		KLV-46V380A	KLV-40V380A
System			
Panel System		LCD (Liquid Crystal Display) Panel	
TV System		D/K, I, B/G,M	
Colour System		PAL, PAL60, SECAM, NTSC4.43, NTSC3.58	
Channel Coverage		D/K: VHF: C1 to C12, R1 to R12/ UHF: C13 to C57, R21 to R60/ CATV: S01 to S03, S1 to S41, Z1 to Z39 I: UHF: B21 to B69/ CATV: S01 to S03, S1 to S41 B/G: VHF: E2 to E12/ UHF: E21 to E69/ CATV: S01 to S03, S1 to S41 M: VHF: A2 to A13/ UHF: A14 to A79/ CATV: A-8 to A-2, A to W+4, W+6 to W+84	
Sound Output		8.5 W + 8.5 W (as distortion of 7%)	
Input/Output jacks			
Antenna		75 ohm external terminal	
S 1		S video input (4-pin mini DIN)	
1, 2, 3		Video input	
1, 2, 3		Audio input: 500 mVrms, 47 kilohms	
1, 2		Supported formats: 1080p (50/60 Hz), 1080i (50/60 Hz), 720p (50/60 Hz), 576p, 576i, 480p, 480i Y: 1 Vp-p, 75 ohms, 0.3V sync negative/PB/CB : 0.7 Vp-p, 75 ohms/PR/CR : 0.7 Vp-p, 75 ohms	
1, 2		Audio input: 500 mVrms, 47 kilohms	
		Video output	
		Audio output	
HDMI IN 1, 2, 3		Video: 1080p (50/60 Hz), 1080i (50/60 Hz), 720p (50/60 Hz), 576p, 576i, 480p, 480i Audio: Two channel linear PCM 32, 44.1 and 48 kHz, 16, 20 and 24 bits Analogue audio input: 500 mVrms, 47 kilohms (HDMI IN 2 only)	
PC IN (RGB)		PC Input (D-sub 15-pin) G: 0.7 Vp-p, 75 ohms, non Sync on Green/B: 0.7 Vp-p, 75 ohms/ R: 0.7 Vp-p, 75 ohms/HD: 1-5 Vp-p/VD: 1-5 Vp-p	
PC IN		PC audio input (minijack)	
		Audio output	
		Headphones jack	
Power and others			
Power Requirements		220 V AC, 50 Hz	
Viewing Screen Size (diagonal)		117 cm (46 inches)	102 cm (40 inches)
Display Resolution		1,920 pixels (horizontal) × 1,080 lines (vertical)	
Power Consumption		270 W	215 W
Standby Power Consumption		Less than 0.6 W	
Dimensions (w × h × d)	with stand (mm)	1114 × 782 × 306	981 × 696 × 265
	without stand (mm)	1114 × 730 × 115	981 × 643 × 110
Mass*	with stand (kg)	32	25
	without stand (kg)	27	21
Product usage condition			
Environment Temperature		5 C - 35 C	
Humidity		20% - 80%	
Air Pressure		86 kPa - 106 kPa	

* Mass are approximate values.

型号		KLV-46V380A	KLV-40V380A
显示规格			
亮度 *		350 cd/m^2 以上 **	
对比度 *		150:1 以上 **	
可视角（L_0/3）*		水平 120˚ 垂直 80˚ 以上	
清晰度（电视线）*	RF 模拟信号	水平 350，垂直 400 线以上 **	
	SDTV	水平 450，垂直 450 线以上 **	
	HDTV	水平 720，垂直 720 线以上 **	
色域覆盖率 *		32 % 以上**	
运动图像拖尾时间 *		20 ms 以下 **	
声音特性 *		额定输入时声压总谐波失真 10 % 以下 **	

* 根据 SJ/T11348-2006 《数字电视平板显示器测量方法》。
** 该指标为 SJ/T11343-2006 《数字电视液晶显示器通用规范》之常温性能要求值。

Design and specifications are subject to change without notice.

PC Input Signal Reference Chart

Signals	Horizontal (Pixel)	Vertical (Line)	Horizontal frequency (kHz)	Vertical frequency (Hz)	Standard
VGA	**640**	**480**	**31.5**	**60**	**VGA**
	640	480	37.5	75	VESA
	720	400	31.5	70	VGA-T
SVGA	**800**	**600**	**37.9**	**60**	**VESA Guidelines**
	800	600	46.9	75	VESA
XGA	**1024**	**768**	**48.4**	**60**	**VESA Guidelines**
	1024	768	56.5	70	VESA
	1024	768	60	75	VESA
WXGA	**1280**	**768**	**47.4**	**60**	**VESA**
	1280	**768**	**47.8**	**60**	**VESA**
	1360	**768**	**47.7**	**60**	**VESA**

- This TV's PC input does not support Sync on Green or Composite Sync.
- This TV's PC input does not support interlaced signals.
- If input signal is not shown in above chart, then this signal may not be displayed properly or cannot be displayed according to your settings.
- For the best picture quality, it is recommended to use the signals (boldfaced) in the above with a 60Hz vertiical frequency from a personal computer. In plug and play, signals with a 60 Hz vertical frequency will be selected automatically.

WARNINGS AND CAUTIONS

CAUTION

These servicing instructions are for use by qualified service personnel only.
To reduce the risk of electric shock, do not perform any servicing other than that contained in the operating instructions unless you are qualified to do so.

WARNING!!

An isolation transformer should be used during any service to avoid possible shock hazard, because of live chassis.
The chassis of this receiver is directly connected to the ac power line.

⚠ SAFETY-RELATED COMPONENT WARNING!!

Replace all components with Sony parts whose part numbers appear as shown in this manual or in supplements published by Sony.

SAFETY-RELATED COMPONENT WARNING

It is essential that all critical parts be replaced only with the part number specified in the electrical parts list to prevent electric shock, fire, or other hazard.

NOTE: Do not modify the original design without obtaining written permission from the manufacturer or you will void the original parts and labor guarantee.

USE CAUTION WHEN HANDLING THE LCD PANEL

When repairing the LCD panel, be sure you are grounded by using a wrist band.

When repairing the LCD panel on the wall, the LCD panel must be secured using the 4 mounting holes on the rear cover.

1) Do not press on the panel or frame edge to avoid the risk of electric shock.
2) Do not scratch or press on the panel with any sharp objects.
3) Do not leave the module in high temperatures or in areas of high humidity for an extended period of time.
4) Do not expose the LCD panel to direct sunlight.
5) Avoid contact with water. It may cause a short circuit within the module.
6) Disconnect the AC power when replacing the backlight (CCFL) or inverter circuit.
   (High voltage occurs at the inverter circuit at 650Vrms.)
7) Always clean the LCD panel with a soft cloth material.
8) Use care when handling the wires or connectors of the inverter circuit. Damaging the wires may cause a short.
9) Protect the panel from ESD to avoid damaging the electronic circuit (C-MOS).

SAFETY CHECK-OUT

After correcting the original service problem, perform the following safety checks before releasing the set to the customer:

1. Check the area of your repair for unsoldered or poorly soldered connections. Check the entire board surface for solder splashes and bridges.

2. Check the interboard wiring to ensure that no wires are "pinched" or touching high-wattage resistors.

3. Check that all control knobs, shields, covers, ground straps, and mounting hardware have been replaced. Be absolutely certain that you have replaced all the insulators.

4. Look for unauthorized replacement parts, particularly transistors, that were installed during a previous repair. Point them out to the customer and recommend their replacement.

5. Look for parts which, though functioning, show obvious signs of deterioration. Point them out to the customer and recommend their replacement.

6. Check the line cords for cracks and abrasion. Recommend the replacement of any such line cord to the customer.

7. Check the antenna terminals, metal trim, "metallized" knobs, screws, and all other exposed metal parts for AC leakage. Check leakage as described below.

Leakage Test

The AC leakage from any exposed metal part to earth ground and from all exposed metal parts to any exposed metal part having a return to chassis, must not exceed 0.5 mA (500 microamperes).
Leakage current can be measured by any one of three methods.

1. A commercial leakage tester, such as the Simpson 229 or RCA WT-540A. Follow the manufacturers' instructions to use these instructions.

2. A battery-operated AC milliampmeter. The Data Precision 245 digital multimeter is suitable for this job.

3. Measuring the voltage drop across a resistor by means of a VOM or battery-operated AC voltmeter. The "limit" indication is 0.75 V, so analog meters must have an accurate low voltage scale.
   The Simpson's 250 and Sanwa SH-63TRD are examples of passive VOMs that are suitable. Nearly all battery-operated digital multimeters that have a 2 VAC range are suitable (see Figure A).

How to Find a Good Earth Ground

A cold-water pipe is a guaranteed earth ground; the cover-plate retaining screw on most AC outlet boxes is also at earth ground. If the retaining screw is to be used as your earth ground, verify that it is at ground by measuring the resistance between it and a cold-water pipe with an ohmmeter. The reading should be zero ohms.

If a cold-water pipe is not accessible, connect a 60- to 100-watt trouble- light (not a neon lamp) between the hot side of the receptacle and the retaining screw. Try both slots, if necessary, to locate the hot side on the line; the lamp should light at normal brilliance if the screw is at ground potential (see Figure B).

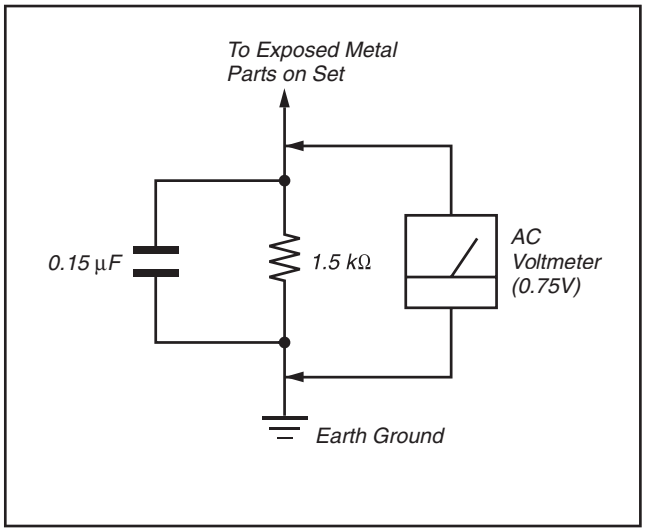

FigureA. Using an AC voltmeter to check AC leakage.

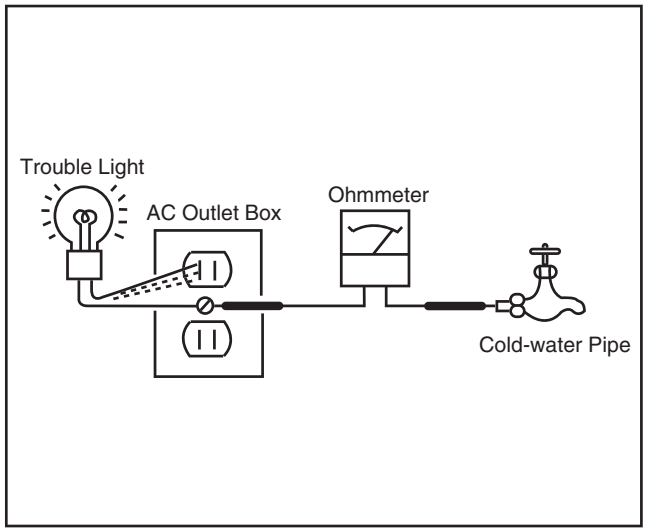

Figure B. Checking for earth ground.

SELF DIAGNOSIS FUNCTION

The units in this manual contain a self-diagnostic function. If an error occurs, the STANDBY LED will automatically begin to flash. The number of times the LED flashes translates to a probable source of the problem.
A definition of the STANDBY LED flash indicators is listed in the instruction manual for the user's knowledge and reference.
If an error symptom cannot be reproduced, the remote commander can be used to review the failure occurrence data stored in memory to reveal past problems and how often these problems occur.

1-1. DIAGNOSTIC TEST INDICATORS

When an error occurs, the STANDBY LED will flash a set number of times to indicate the possible cause of the problem.
If there is more than one error, the LED will identify the first of the problem areas.
Result for all of the following diagnostic items are displayed on screen.
If the screen displays a "0", no error has occurred .

Number of times STANDY LED (Red) flashes	Monitoring Items (Screen Display)	Diagnostic Item Description
2 times	DC_DET	Main power supply voltage error (12V, etc)
3 times	DC_ALERT1	Malfunction of 3.3V line (Trident circuit, etc)
4 times	DC_ALERT2	Malfunction of 5V line (Voltage Supply to FE, etc)
5 times	DC_ALERT3	Malfunction of power supply for screen
6 times	BACKLIGHT	Malfunction of inverter or overcurrent, etc
7 times *2	TEMPERATURE	Abnormal temperature inside unit
8 times	AUDIO	Audio circuit error (amplifier, etc.)
9 times	AUSD FAN *3	Fan malfunction
10 times	DEF	Digital FE circuit error
11 times	B-ENGINE	Malfunction of Trident IC or around IC
12 times	HFR	BH board error *1
13 times	(No item on screen display)	Malfunction of balancer

*1: When safety shutdown occurs because of FRC ACK, 1.5V line, 2.5V/3.3V line, or Panel 12V malfunction, BH board is considered to be abnormal.
*2: If abnormal temperature of BH board occurs, STANDY LED flashes is same as abnormal temperature inside unit, the error is differentiated by shot unit down or not. When the unit shut down, abnormal temperature inside unit occurs.
*3: No item on screen display

1-2. DISPLAY OF STANDBY/TIMER LIGHT FLASH COUNT

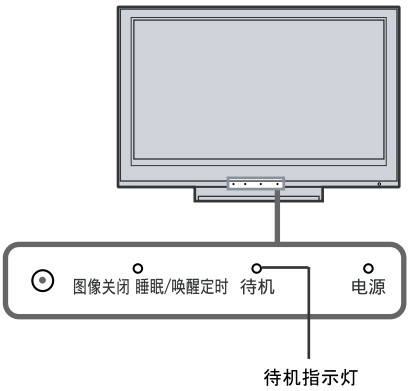

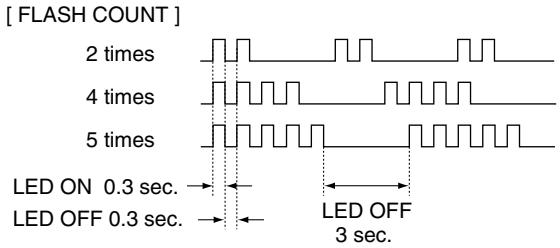

Note: One flash counts is not self-diagnostic.

1-3. STOPPING THE STANDBY FLASH

Turn off the power switch on the TV main unit or unplug the power cord from the outlet to stop the STANDBY LED from flashing.

1-4. SELF-DIAGNOSTIC SCREEN DISPLAY

For errors with symptoms such as “power sometimes shuts off” or “screen sometimes goes out” that cannot be confirmed, it is possible to bring up past occurrences of failure for confirmation on the screen:

1-4-1. To Bring Up Screen Test

In standby mode, press buttons on the remote commander sequentially in rapid succession as shown below:

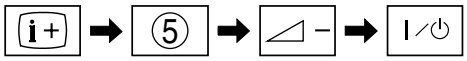

（屏 显） （数字按钮） *（音 量） （电源/待机）

* : Note that this differs from entering the service mode (volume +)

[SELF-DIAGNOSTIC SCREEN DISPLAY]

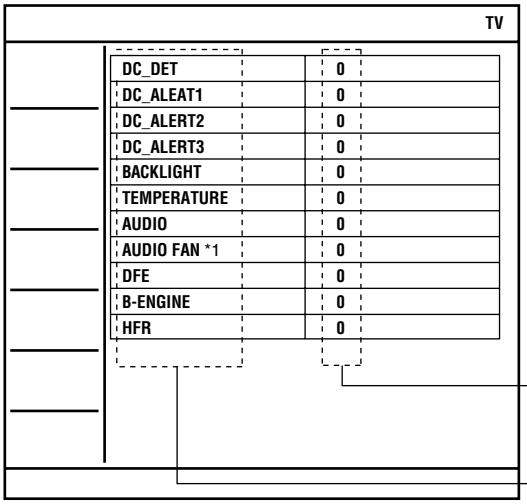

Error Count Record
Number "0": means that no fault detected.
Number "1": means a fault was detected one time only.

Monitoring Items
For details, refer to "1-1. DIAGNOSTIC TEST INDICATORS"

*1 : KLV-32/40/46D300A Model only

Since the diagnostic results displayed on the screen are not automatically cleared, always check the self-diagnostic screen
After you have completed the repairs, clear the result display to “0”.

1-5. Quitting Self-diagnostic screen

To quit the entire self-diagnostic screen, turn off the power switch on the remote commander or the main unit.

TABLE OF CONTENTS

SAFETY CHECK-OUT 9

SELF DIAGNOSIS FUNCTION 10

1. DISASSEMBLY 1-1

1-1. KLV-32D300A/32V300A 1-1
1-1-1. REAR COVER REMOVAL 1-1
1-1-2. STAND ASSY AND VESA ARM ASSY REMOVAL 1-1
1-1-3. H1 BOARD REMOVAL 1-2
1-1-4. U1/U2 BOARD AND SIDE TERMINAL 1-2
1-1-5. G1H BOARD REMOVAL 1-3
1-1-6. DTT (TOP) SHIELD REMOVAL 1-3
1-1-7. BG1/UT BOARD REMOVAL 1-4
1-1-8. BH BOARD REMOVAL (KLV-32D300A) ... 1-4
1-1-9. UNDER COVER REMOVAL 1-5
1-1-10. SPEAKER REMOVAL 1-5
1-1-11. LCD PANEL REMOVAL 1-6
1-2. KLV-40/46D300A, 40/46V300A, 40/46V380A ... 1-7
1-2-1. REAR COVER REMOVAL 1-7
1-2-2. STAND ASSY AND VESA ARM ASSY REMOVAL 1-7
1-2-3. H1 BOARD REMOVAL 1-8
1-2-4. U1/U2/U2B BOARD AND SIDE TERMINAL REMOVAL 1-8
1-2-5. G3 AND D1 (DF1, DF2) BOARDS REMOVAL 1-9
1-2-6. DTT (TOP) SHIELD REMOVAL 1-9
1-2-7. BG1/UT BOARD REMOVAL 1-10
1-2-8. BH BOARD REMOVAL (KLV-40/46D300A) 1-10
1-2-9. AC INLET AND UNDER COVER REMOVAL 1-11
1-2-10. LCD BKT BTM L/R ASSY 1-11
1-2-11. SPEAKER REMOVAL 1-12
1-2-12. H3 AND H4 BOARDS REMOVAL 1-12
1-2-13. D2 (D3) BOARD REMOVAL 1-13
1-2-14. LCD PANEL AND BEZEL ASSY REMOVAL 1-14

2. DIAGRAMS 2-1

2-1. CIRCUIT BOARDS LOCATION 2-1
(1) KLV-32D300A, 32V300A 2-1
(2) KLV-40/46D300A, 40/46V300A, 40/46V380A 2-1

3. EXPLODED VIEWS 3-1

3-1. KLV-32D300A/32V300A 3-2
3-1-1. REAR COVER AND STAND ASSY 3-2
3-1-2. CHASSIS-1 3-3
3-1-3. CHASSIS-2 3-4
3-1-4. CHASSIS-3 3-5
3-1-5. SPEAKER 3-6
3-1-6. BEZEL ASSY AND LCD PANEL 3-7
3-2. KLV-40/46D300A, 40/46V300A, 40/46V380A 3-8
3-2-1. REAR COVER AND STAND ASSY 3-8
3-2-2. CHASSIS-1 3-9
3-2-3. CHASSIS-2 3-10
3-2-4. CHASSIS-3 3-11
3-2-5. SPEAKER 3-12
3-2-6. BEZEL ASSY AND LCD PANEL 3-13
3-3. PACKING MATERIALS (KLV-32D300A/32V300A) 3-14
3-4. PACKING MATERIALS (KLV-40D300A/40V300A/40V380A) 3-15
3-5. PACKING MATERIALS (KLV-46D300A/46V300A/46V380A) 3-16

SECTION 1
DISASSEMBLY

1-1. KLV-32D300A/32V300A

1-1-1. REAR COVER REMOVAL

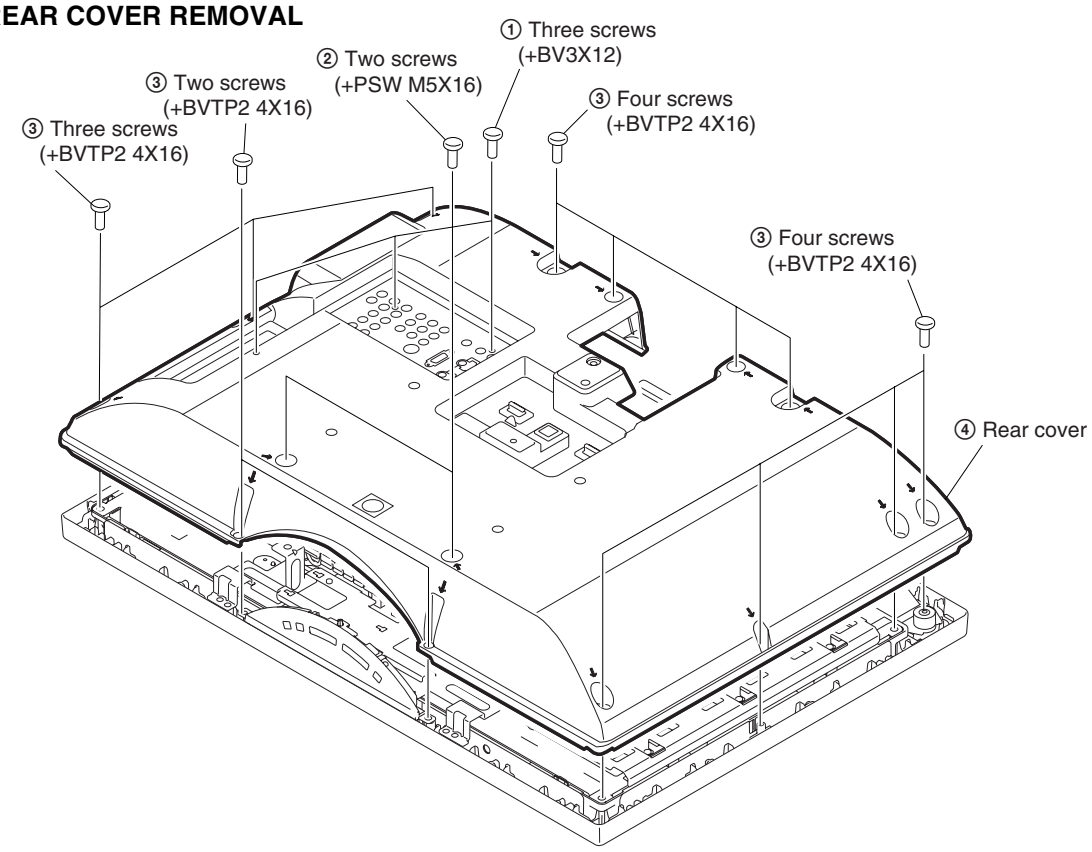

1-1-2. STAND ASSY AND VESA ARM ASSY REMOVAL

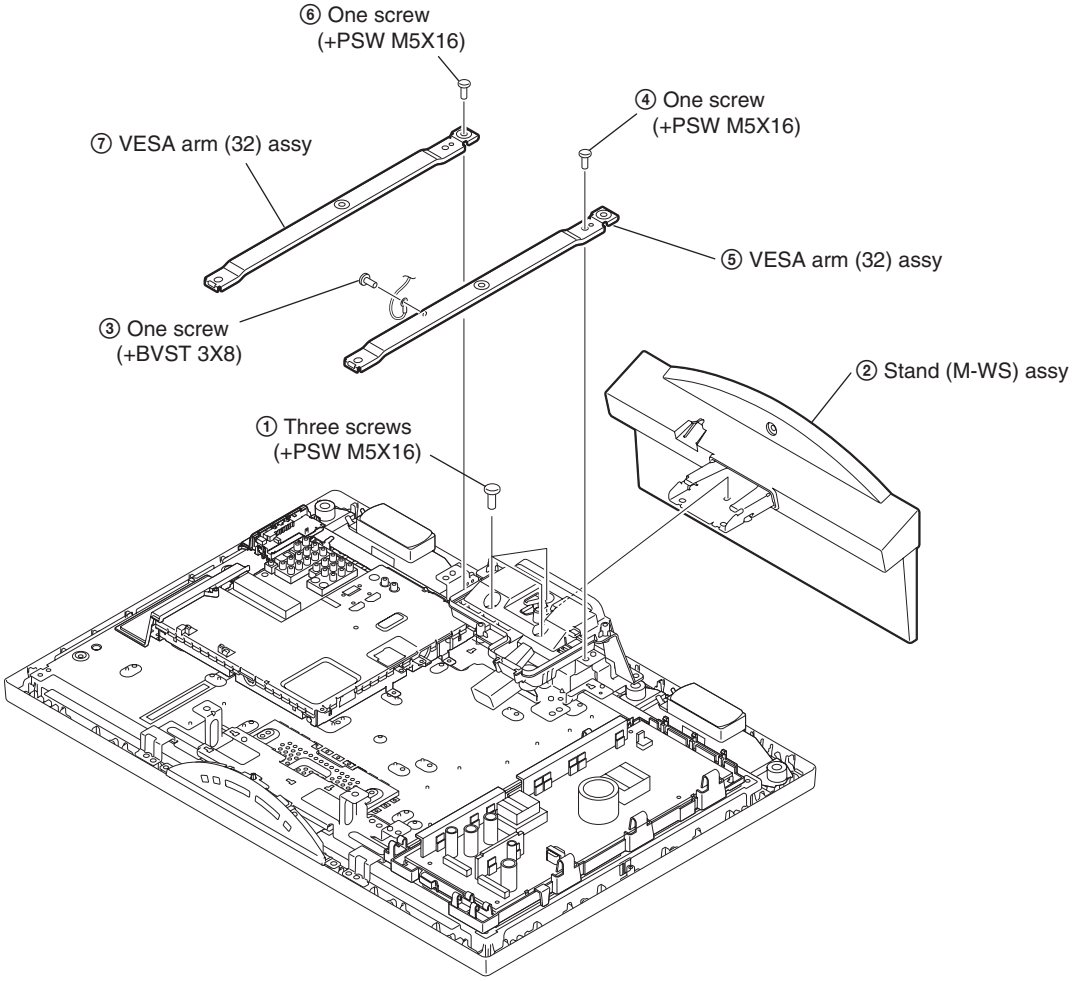

1-1-3. H1 BOARD REMOVAL

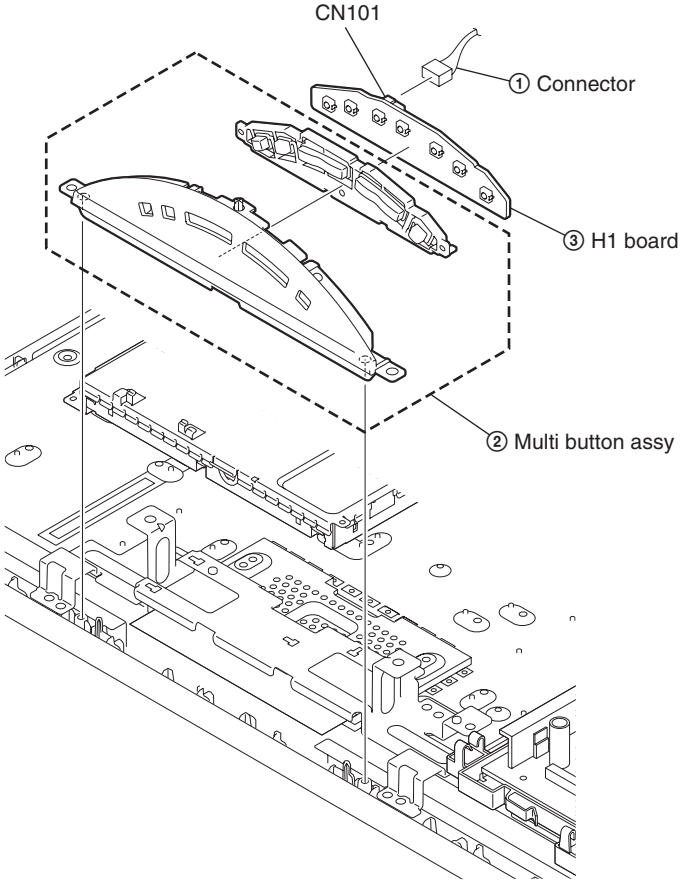

1-1-4. U1/U2 BOARD AND SIDE TERMINAL

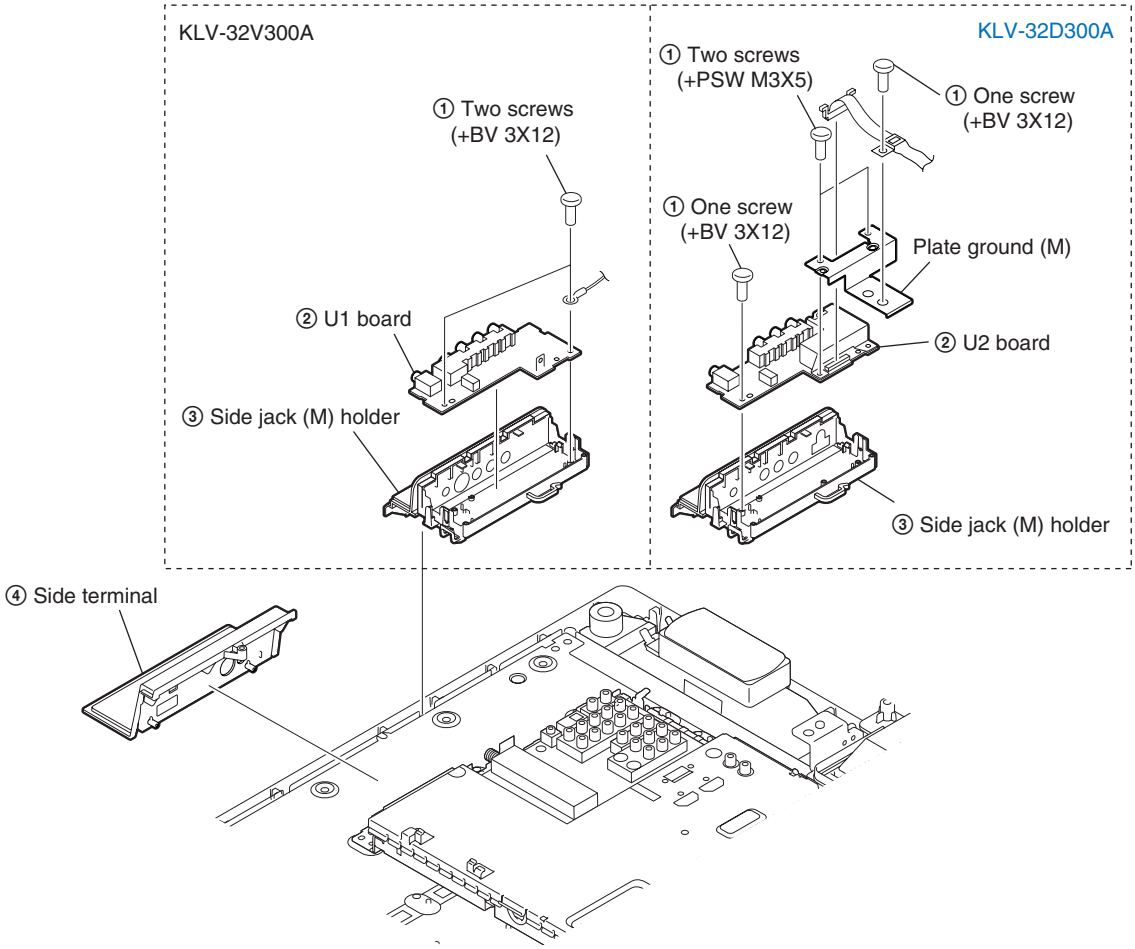

1-1-5. G1H BOARD REMOVAL

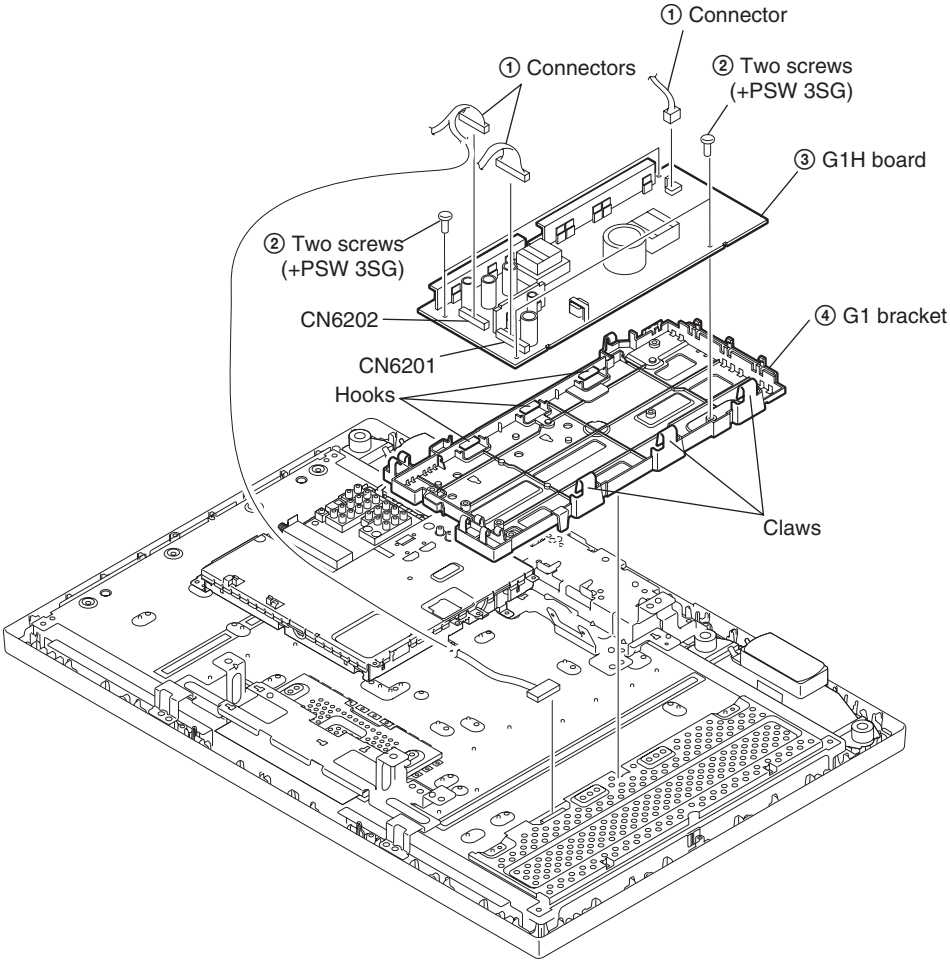

1-1-6. DTT (TOP) SHIELD REMOVAL

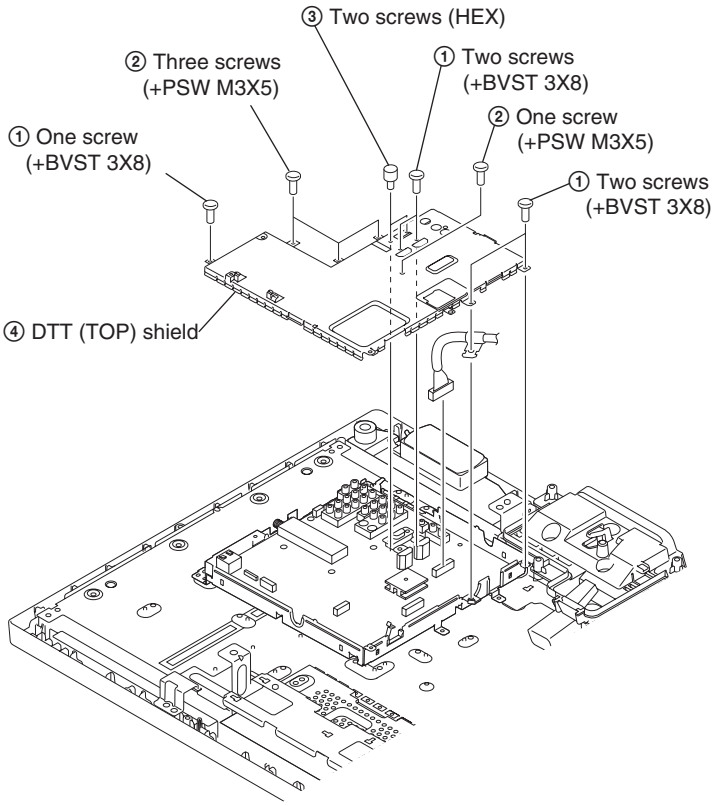

1-1-7. BG1/UT BOARD REMOVAL

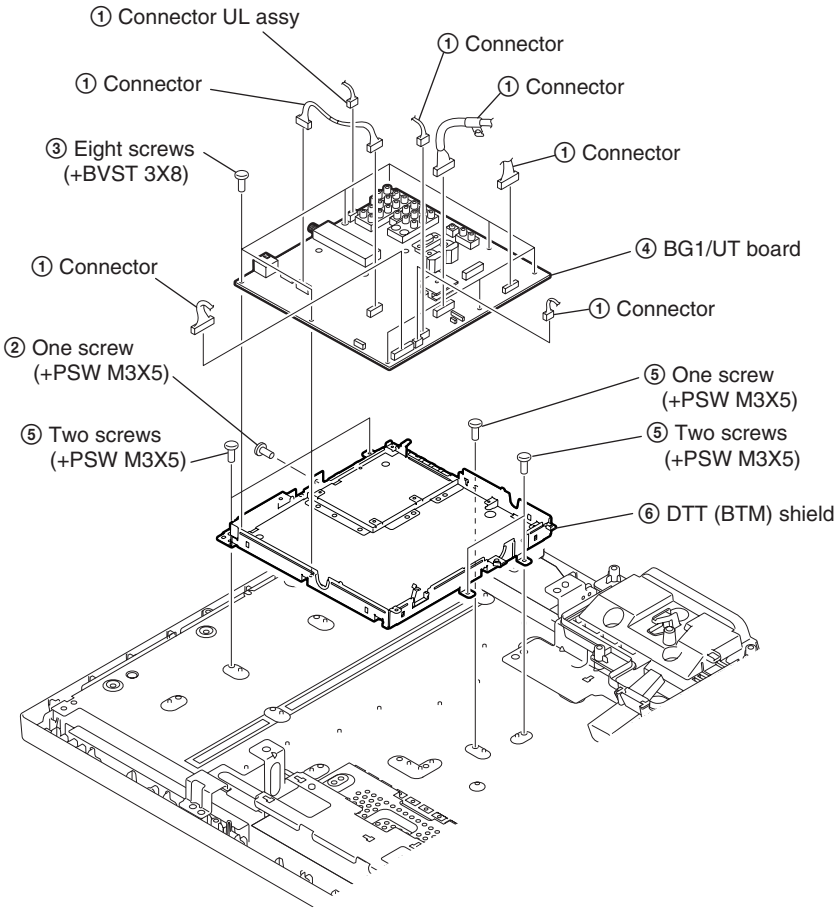

1-1-8. BH BOARD REMOVAL (KLV-32D300A)

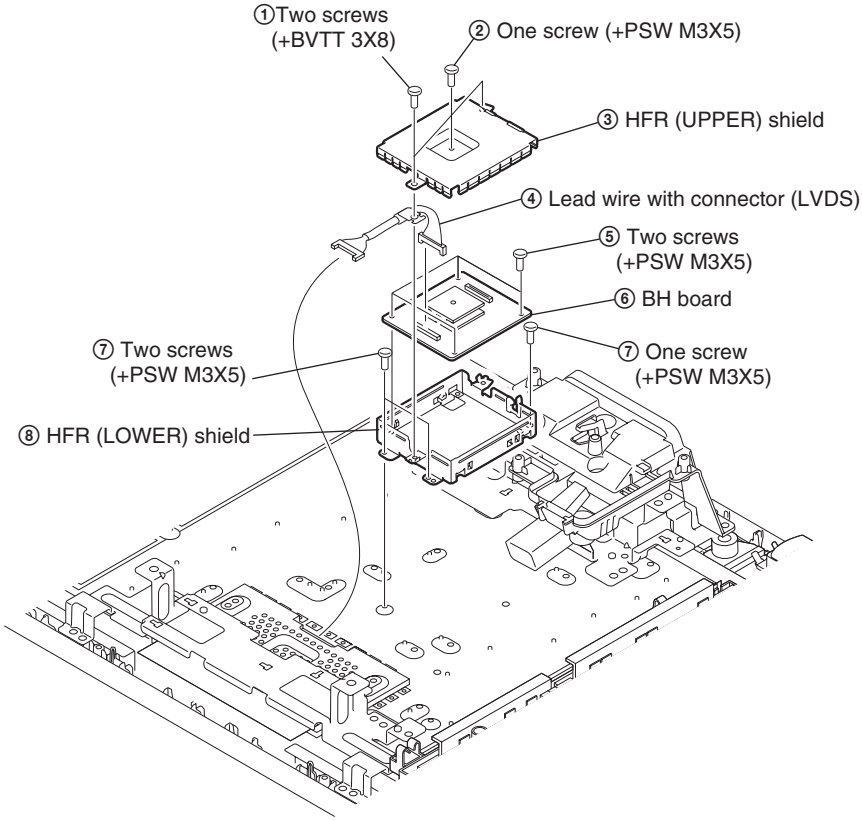

1-1-9. UNDER COVER REMOVAL

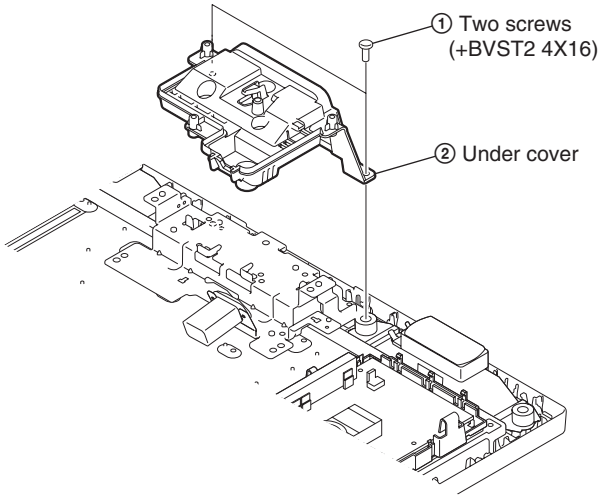

1-1-10. SPEAKER REMOVAL

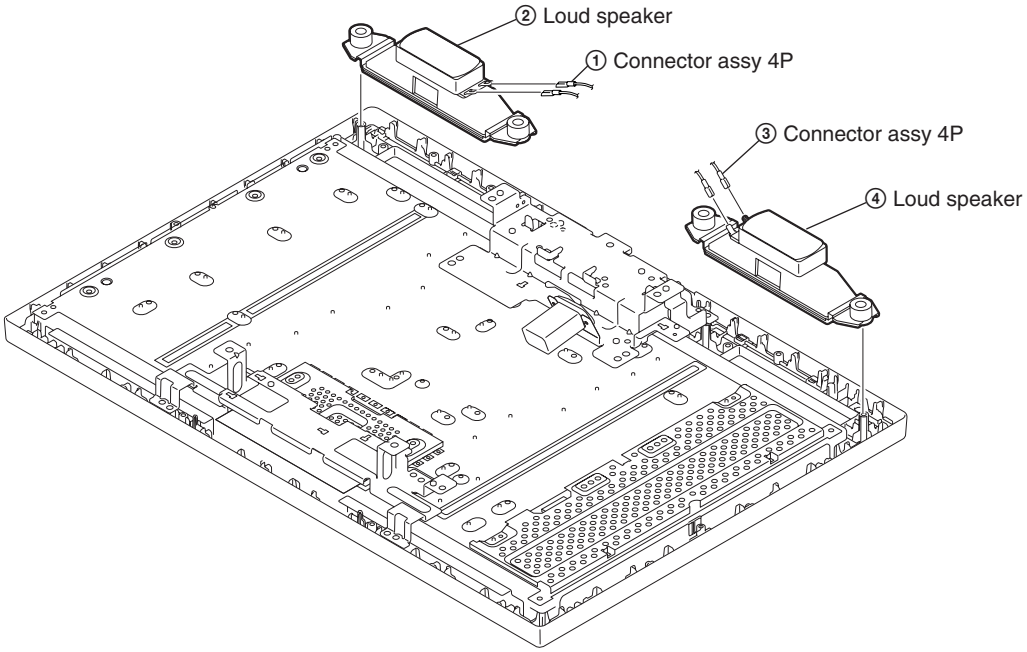

1-1-11. LCD PANEL REMOVAL

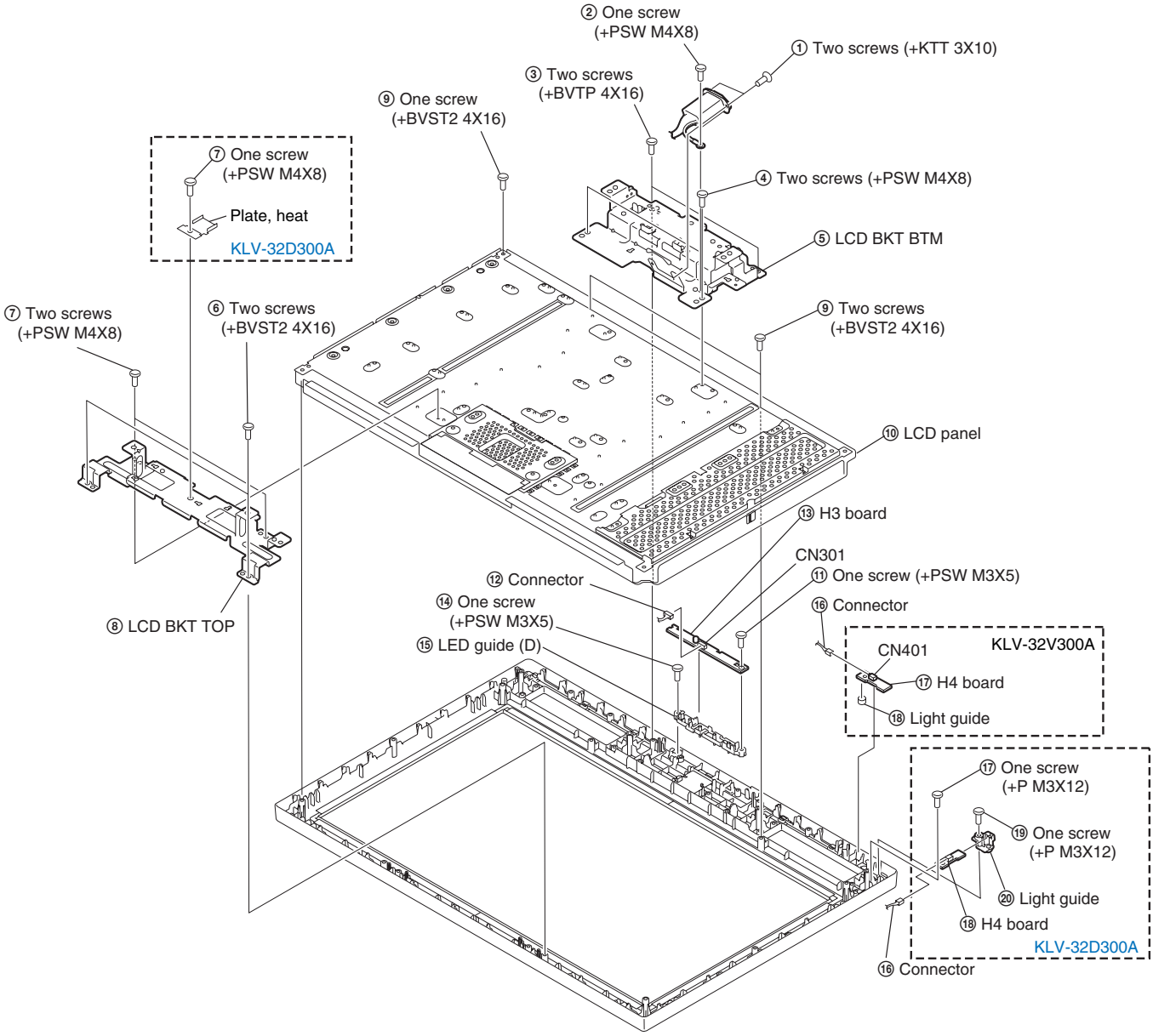

TO INSERT THE CONNECTOR

The connector might not be properly locked when only pressed from the middle.
Be sure to press both sides to confirm it is property locked.

① Press the middle part of the connector to insert till it locks.

② Press the right side to confirm it is locked.

③ Press the left side to confirm it is locked.

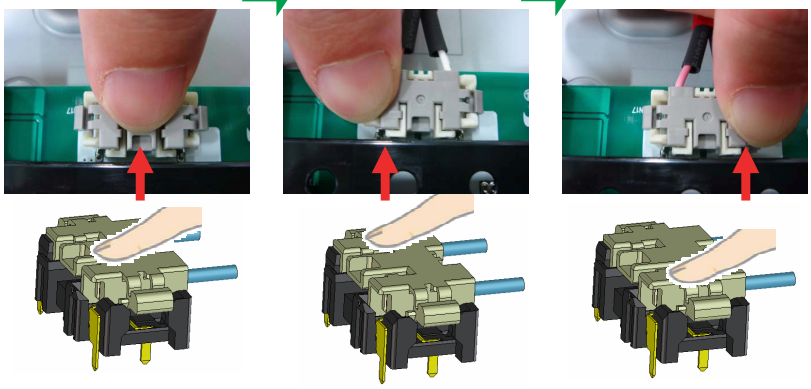

1-2. KLV-40/46D300A, 40/46V300A, 40/46V380A

1-2-1. REAR COVER REMOVAL

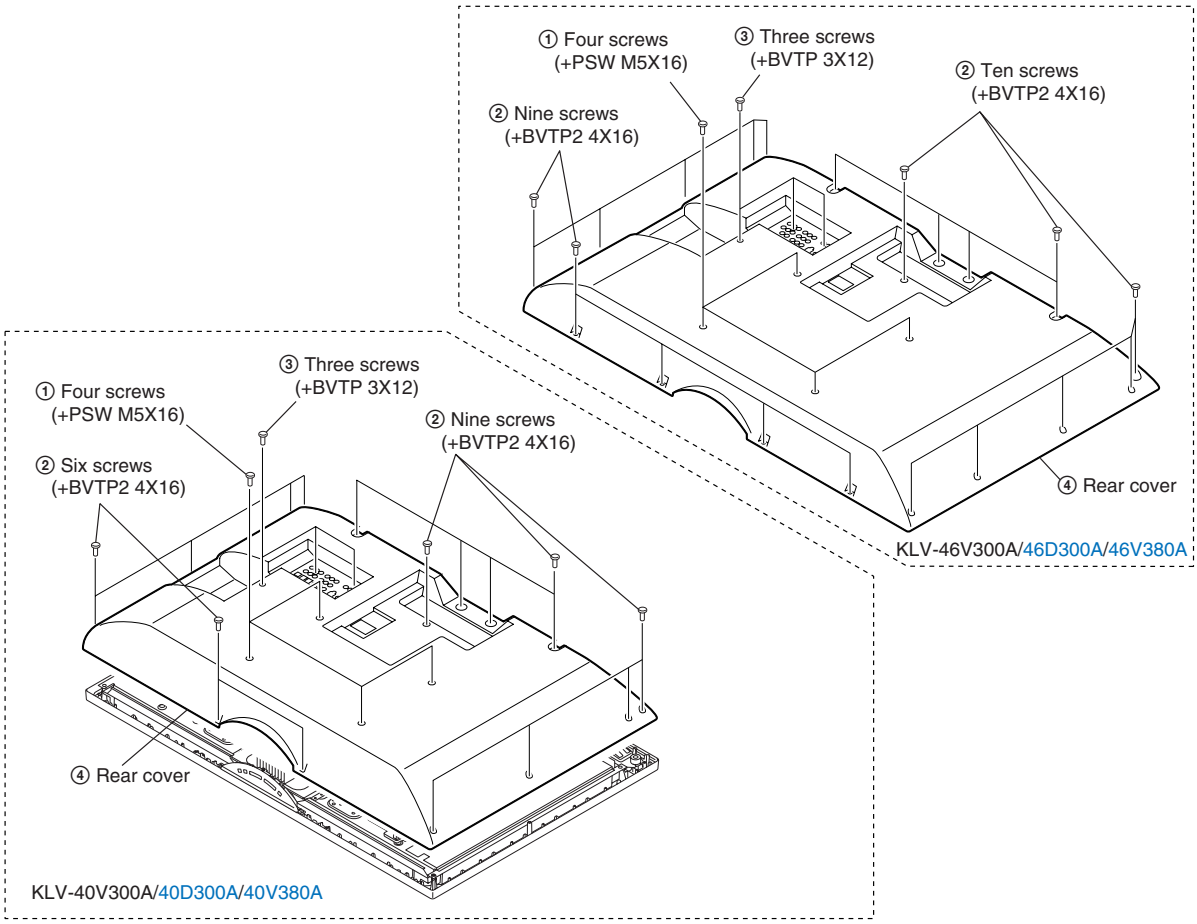

1-2-2. STAND ASSY AND VESA ARM ASSY REMOVAL

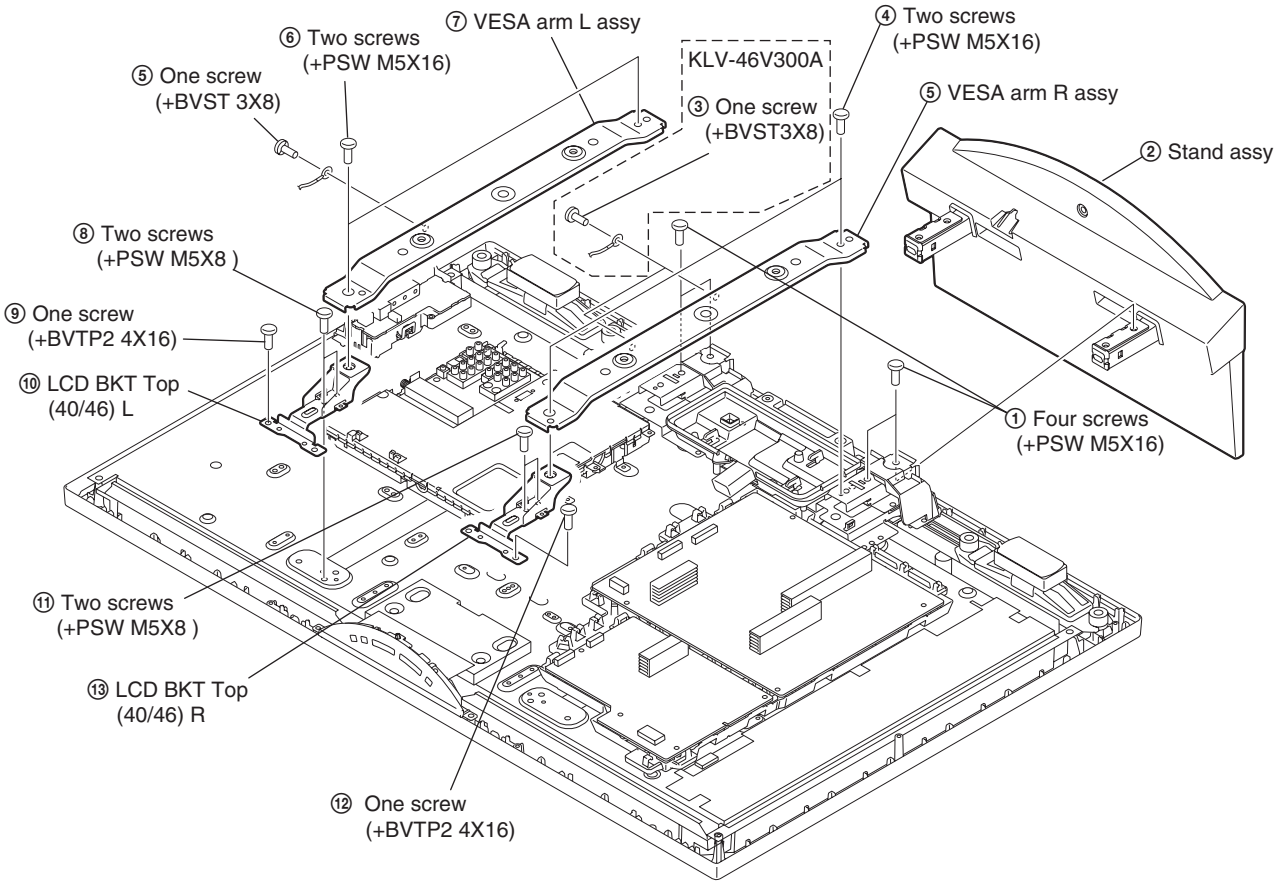

KLV-40/46D300A, 40/46V300A, 40/46V380A

1-2-3. H1 BOARD REMOVAL

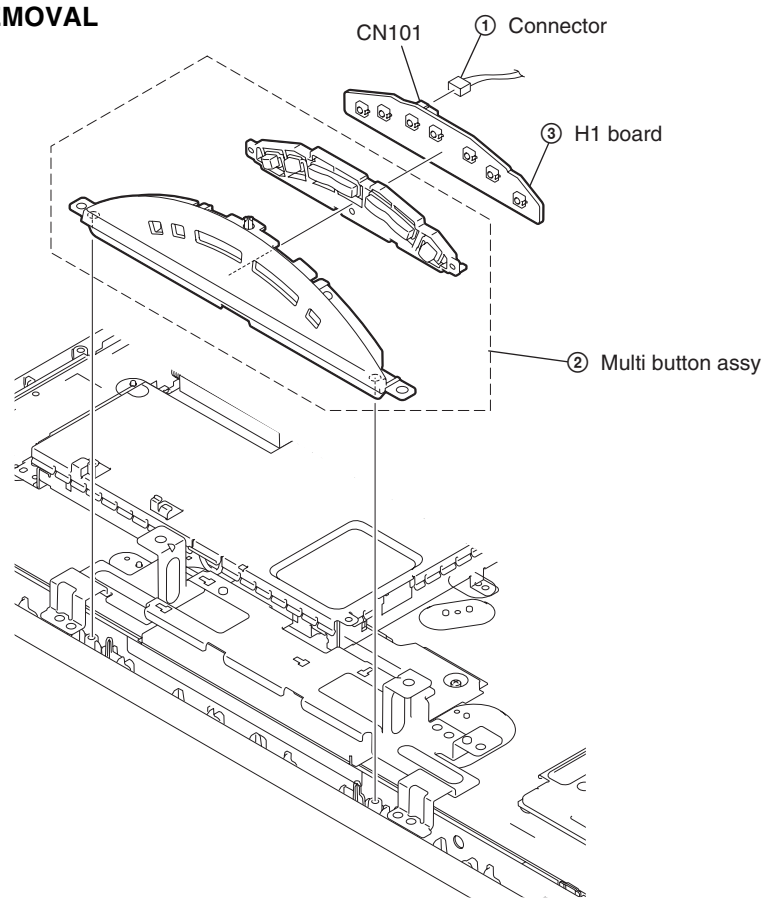

1-2-4. U1/U2/U2B BOARD AND SIDE TERMINAL REMOVAL

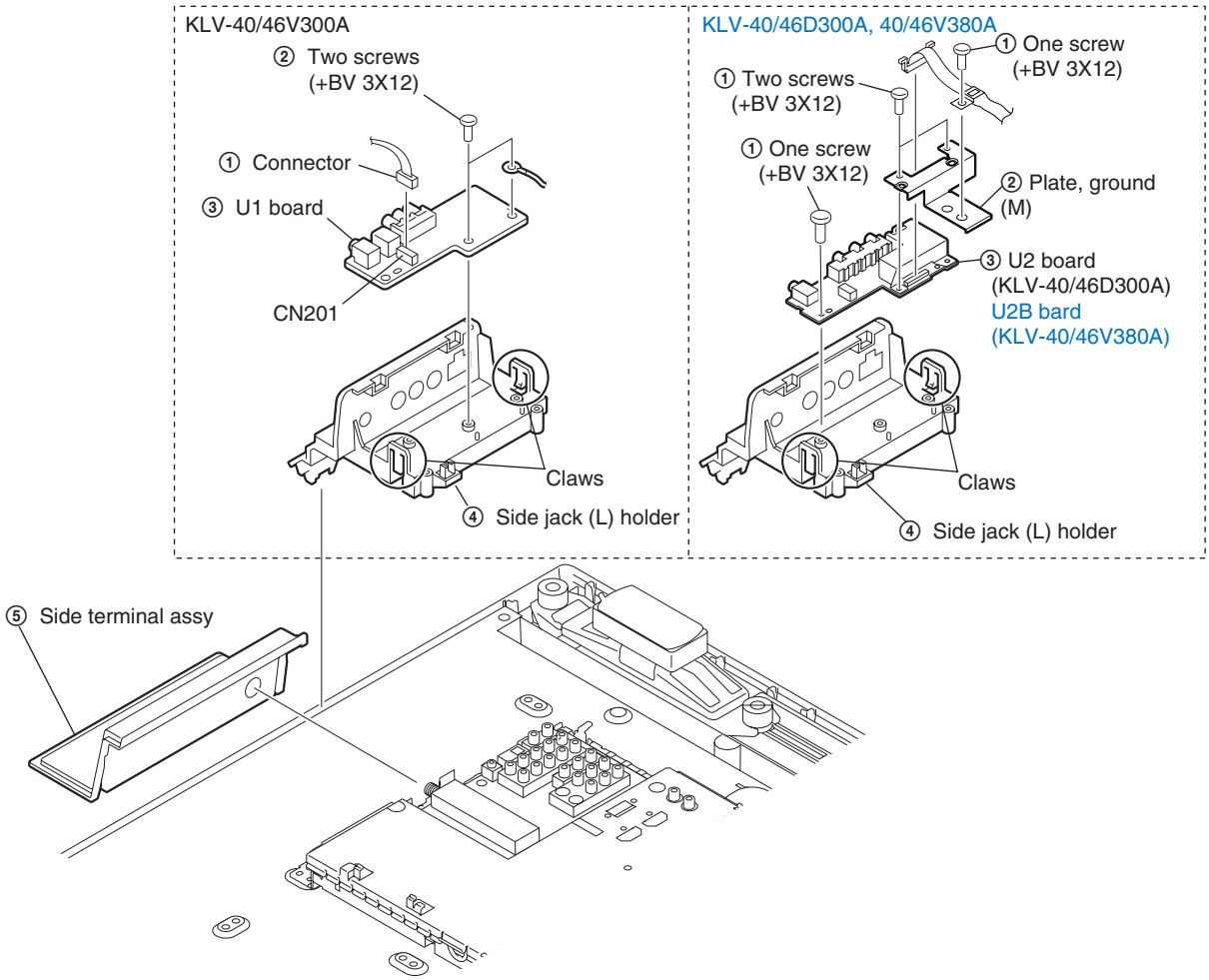

1-2-5. G3 AND D1 (DF1, DF2) BOARDS REMOVAL

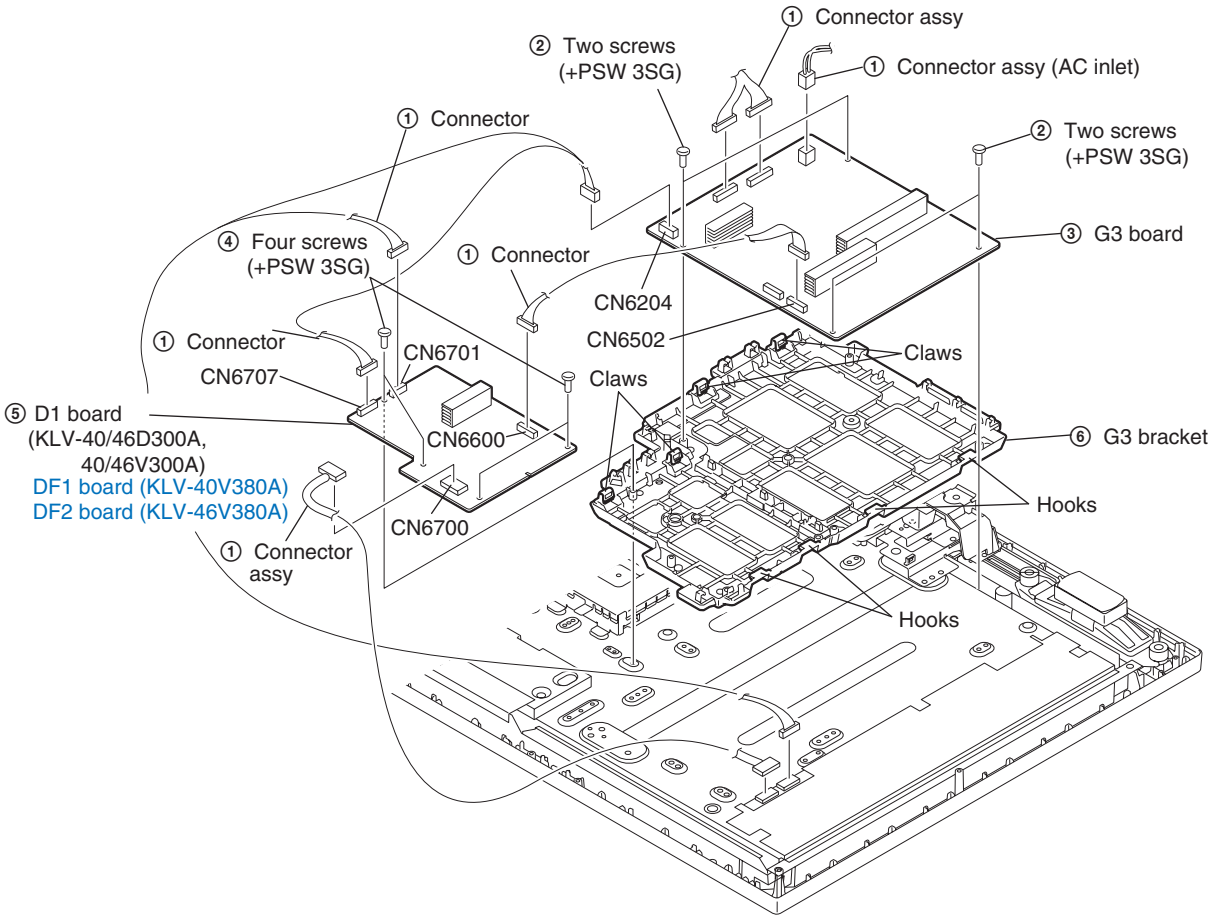

1-2-6. DTT (TOP) SHIELD REMOVAL

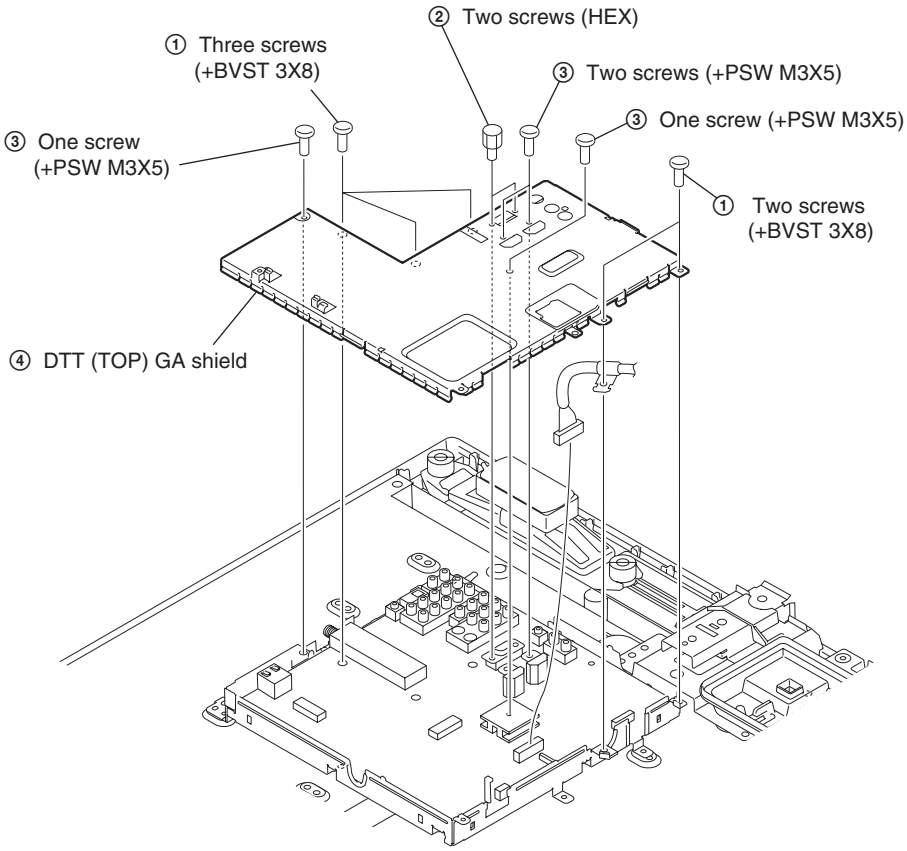

1-2-7. BG1/UT BOARD REMOVAL

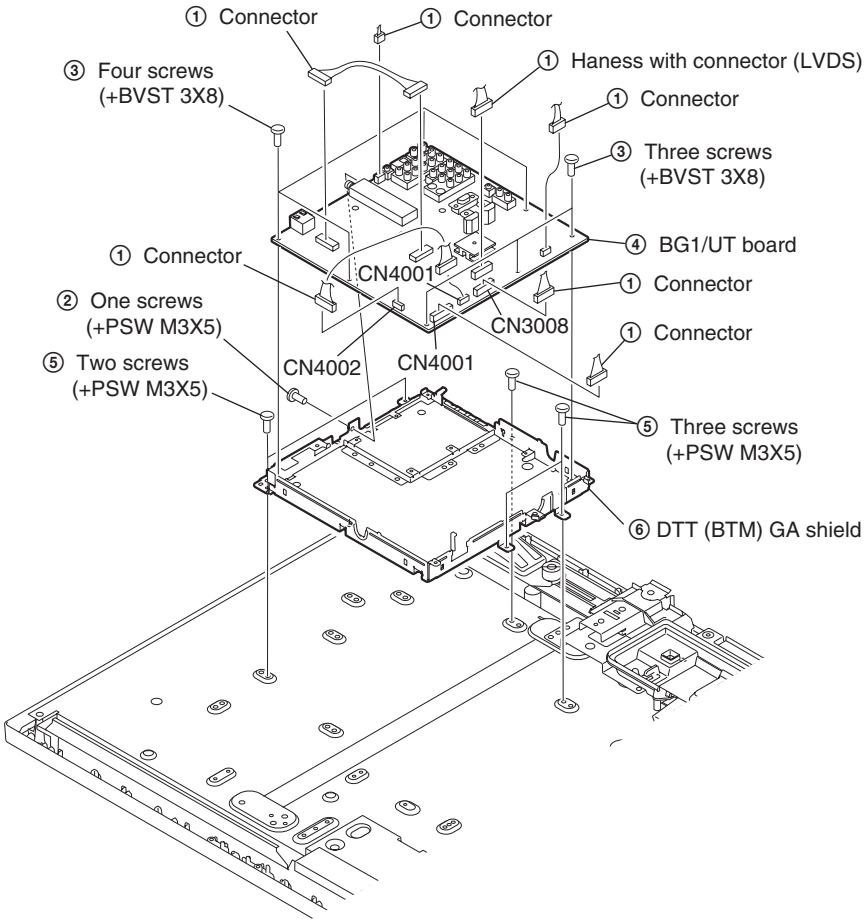

1-2-8. BH BOARD REMOVAL (KLV-40/46D300A)

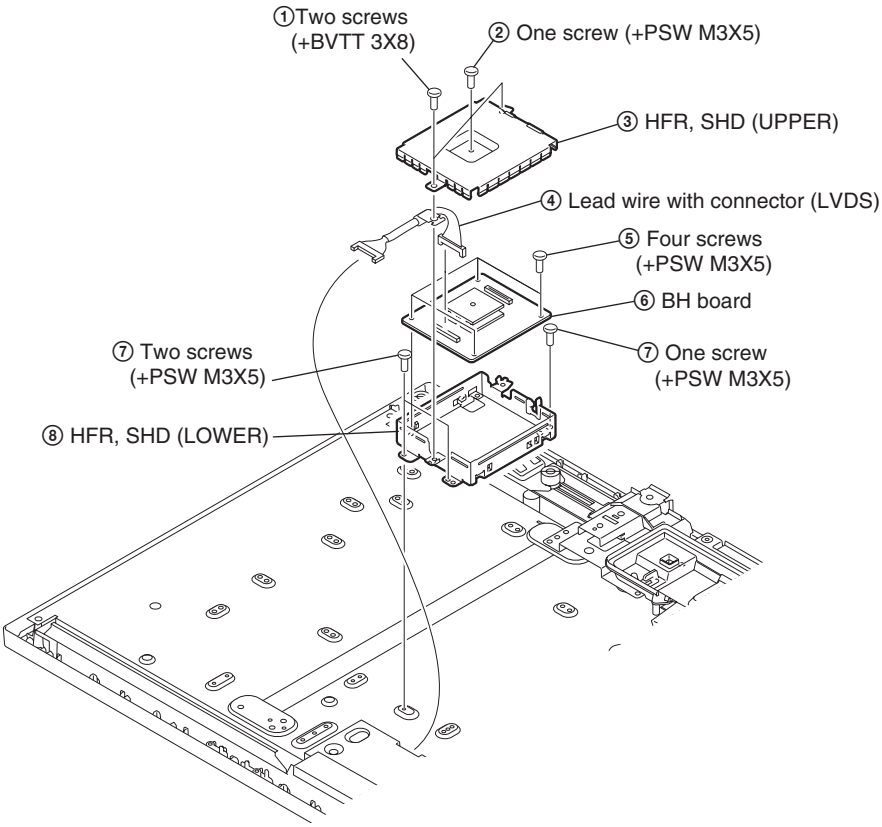

1-2-9. AC INLET AND UNDER COVER REMOVAL

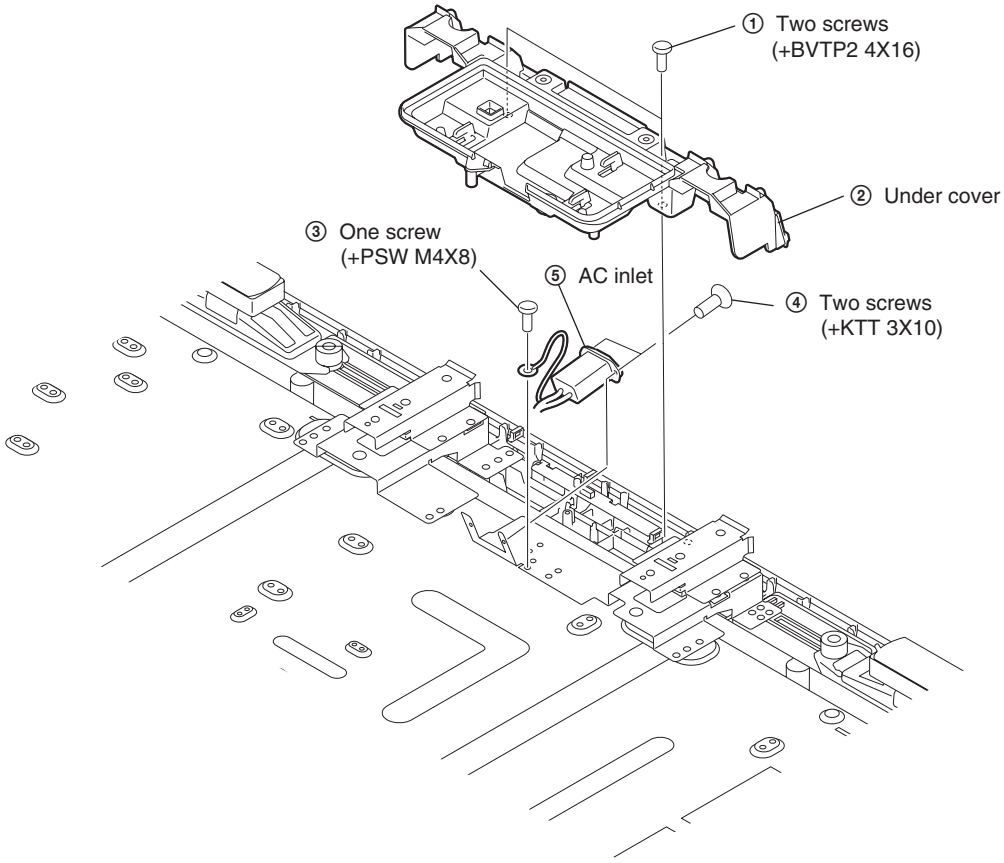

1-2-10. LCD BKT BTM L/R ASSY

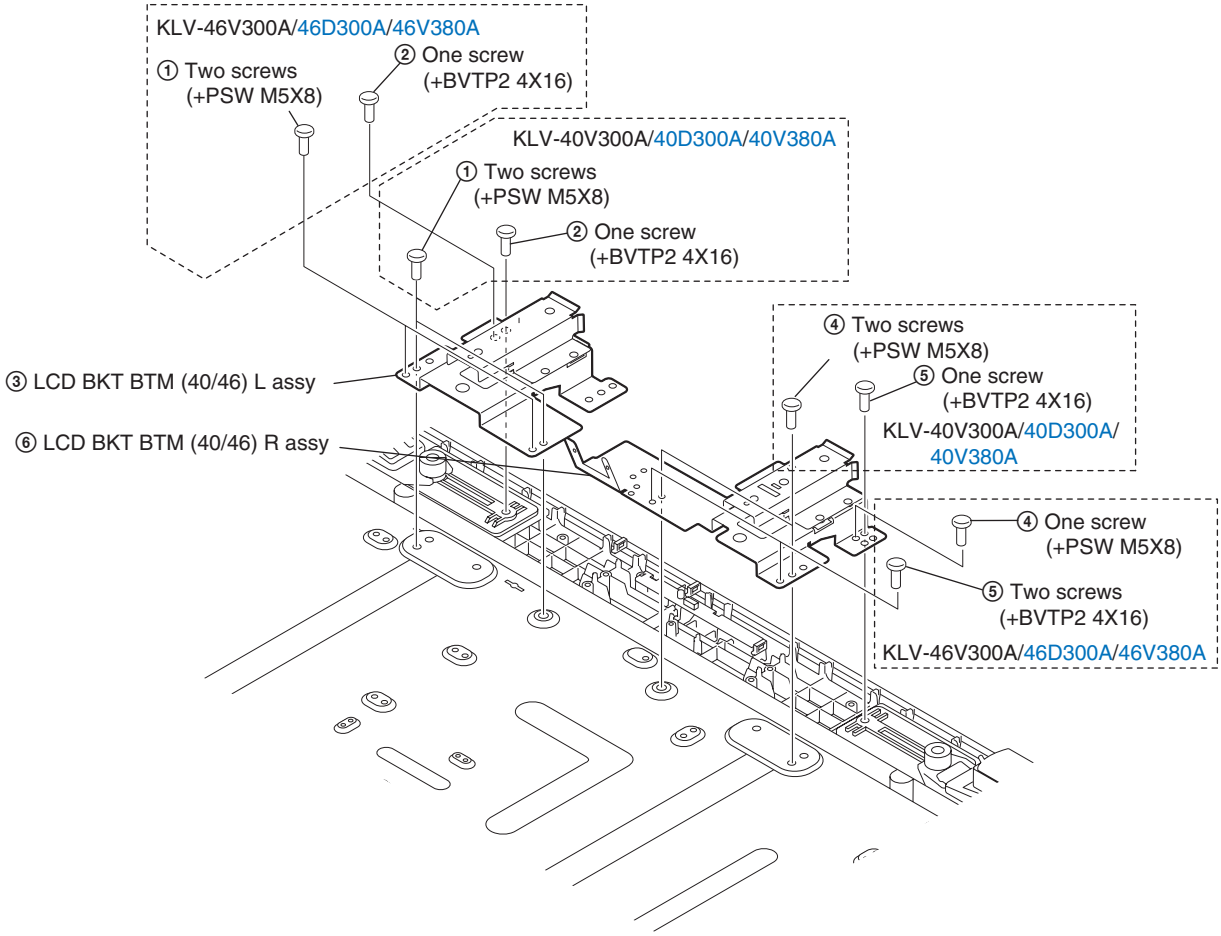

1-2-11. SPEAKER REMOVAL

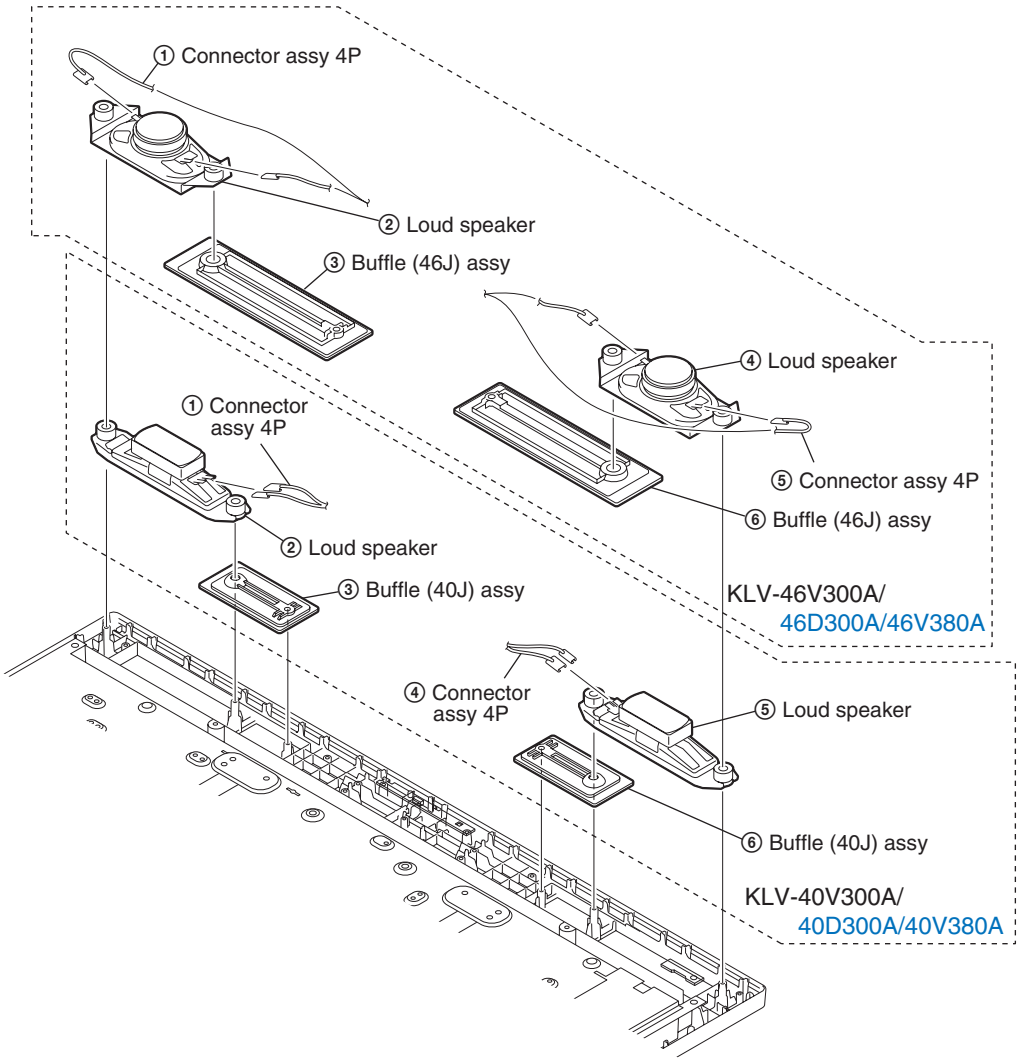

1-2-12. H3 AND H4 BOARDS REMOVAL

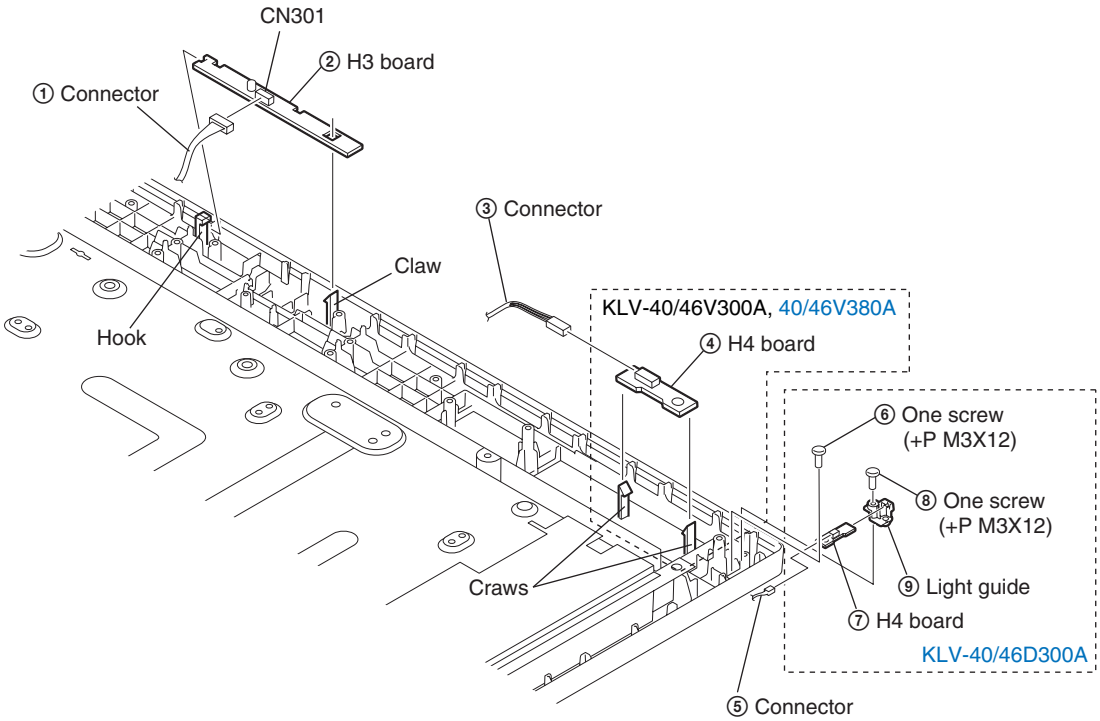

1-2-13. D2 (D3) BOARD REMOVAL

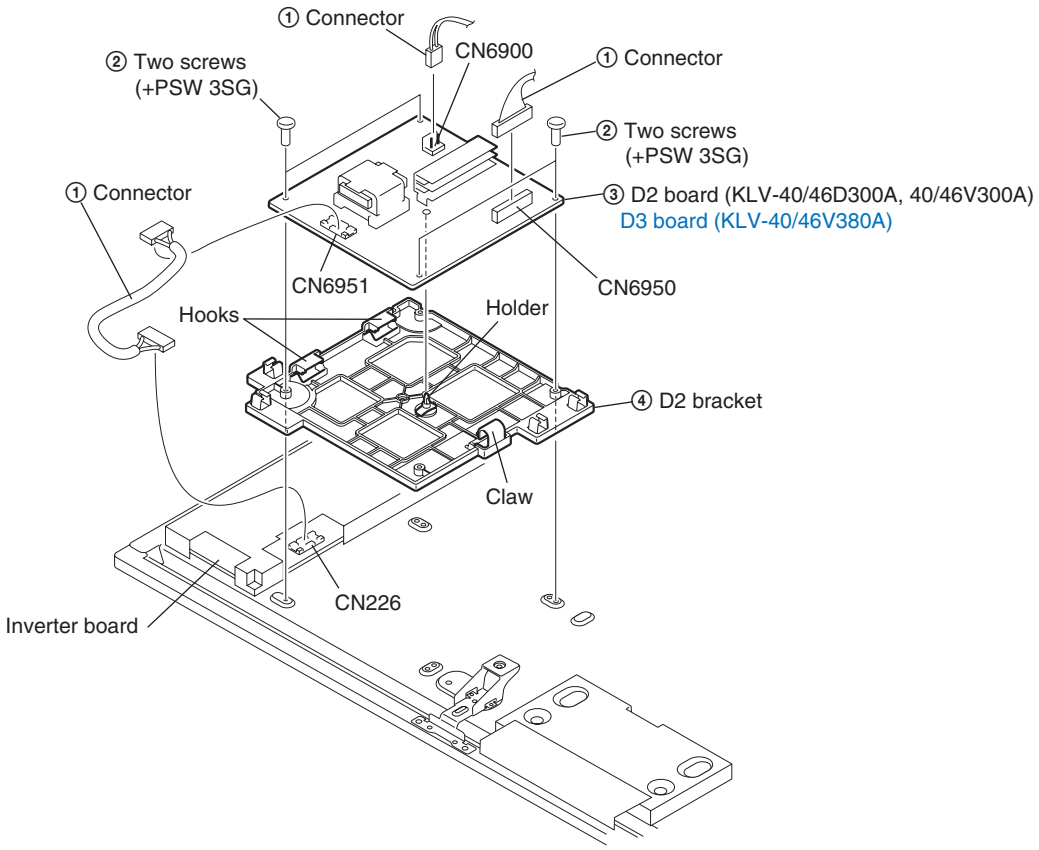

1-2-14. LCD PANEL AND BEZEL ASSY REMOVAL

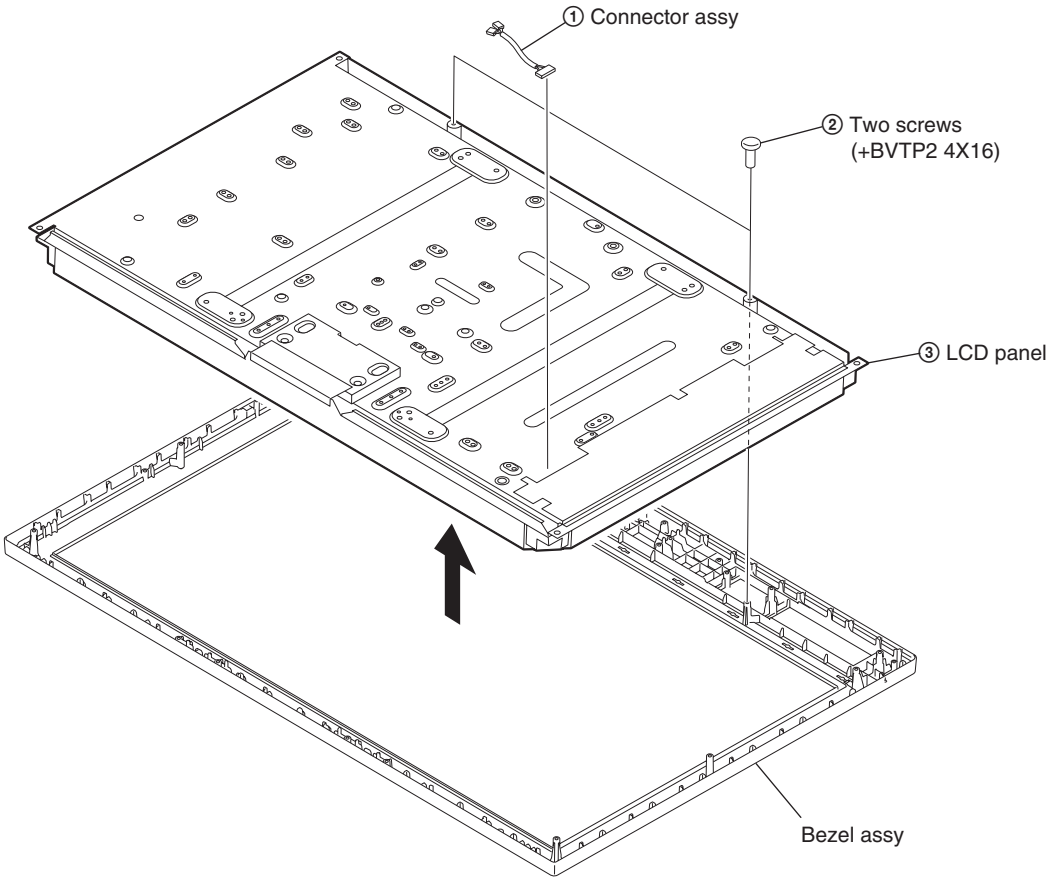

TO INSERT THE CONNECTOR

The connector might not be properly locked when only pressed from the middle.
Be sure to press both sides to confirm it is property locked.

① Press the middle part of the connector to insert till it locks.

② Press the right side to confirm it is locked.

③ Press the left side to confirm it is locked.

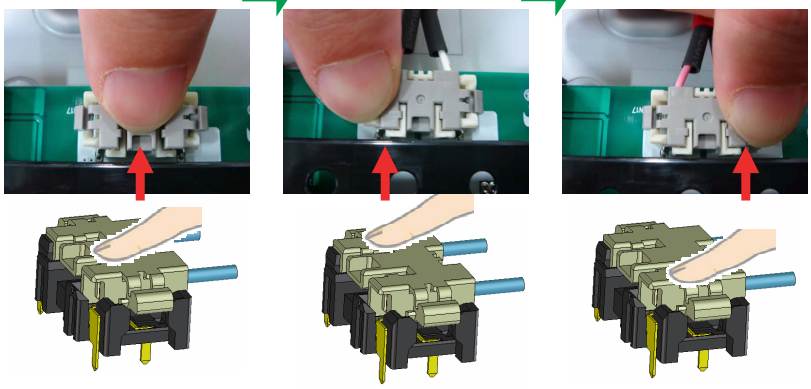

SECTION 2
DIAGRAMS

2-1. CIRCUIT BOARDS LOCATION

(1) KLV-32D300A, 32V300A

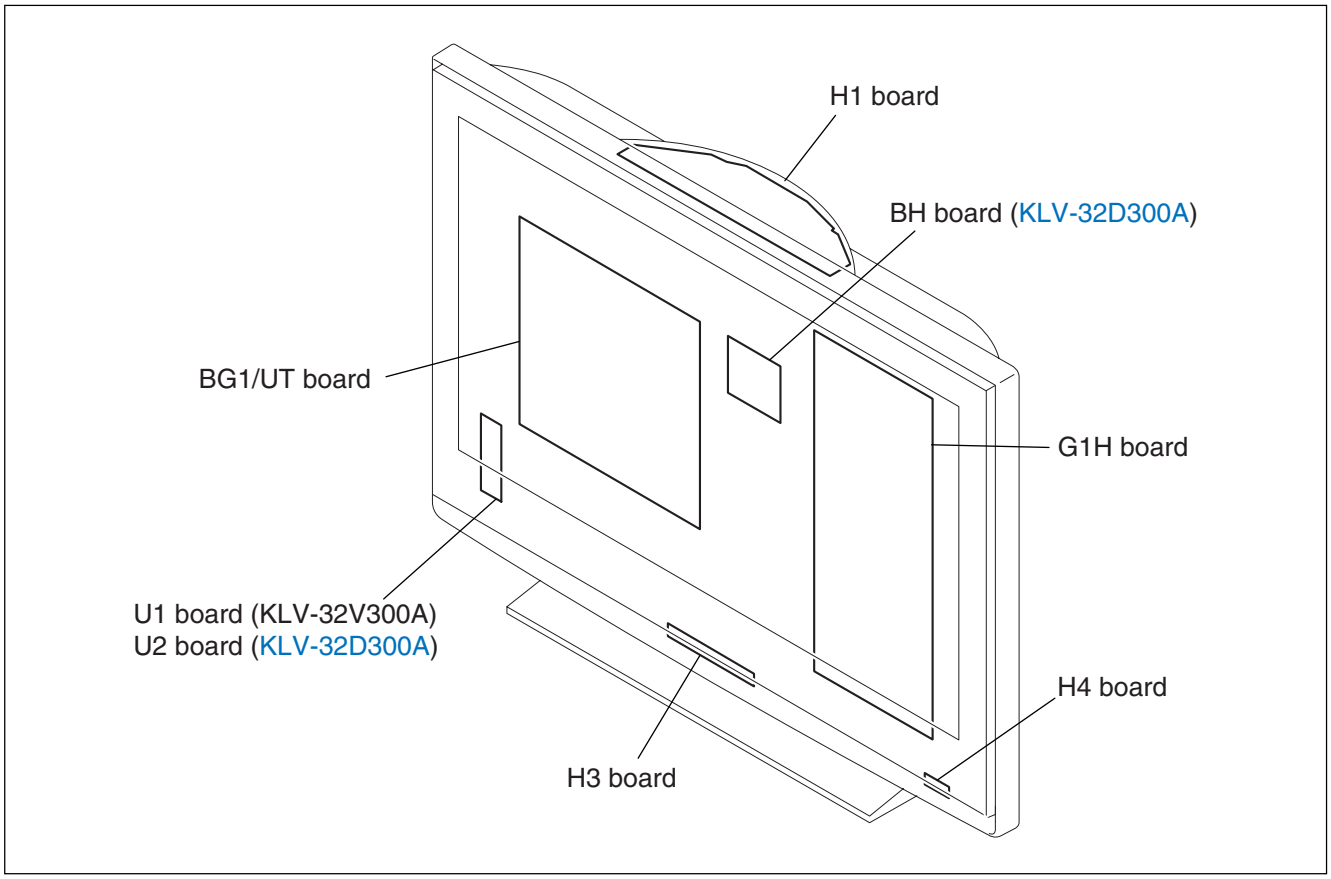

(2) KLV-40/46D300A, 40/46V300A, 40/46V380A

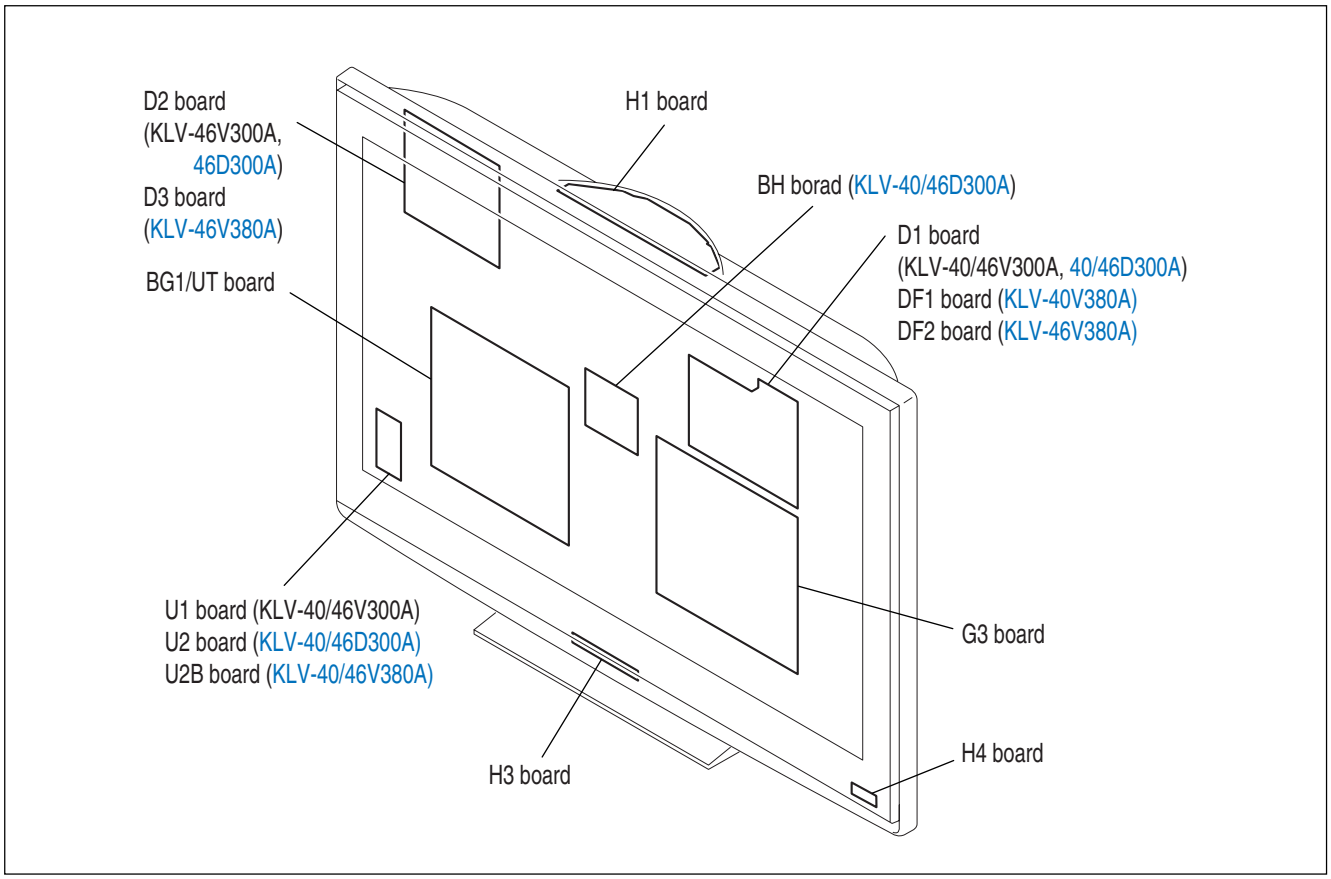

SECTION 3
EXPLODED VIEWS

NOTE:

The components identified by shading and mark ⚠ are critical for safety. Replace only with part number specified.

The components identified by mark 🔒 contain confidential information. Strictly follow the instructions whenever the components are repaired and/or replaced.

- Items with no part number and no description are not stocked because they are seldom required for roution service.
- The construction parts of an assembled part are indicated with a collation number in the remark colum.
- Items marked " * " are not stocked since they are seldom required for routine service. Some delay should be anticipated when ordering these items.

3-1. KLV-32D300A/32V300A

3-1-1. REAR COVER AND STAND ASSY

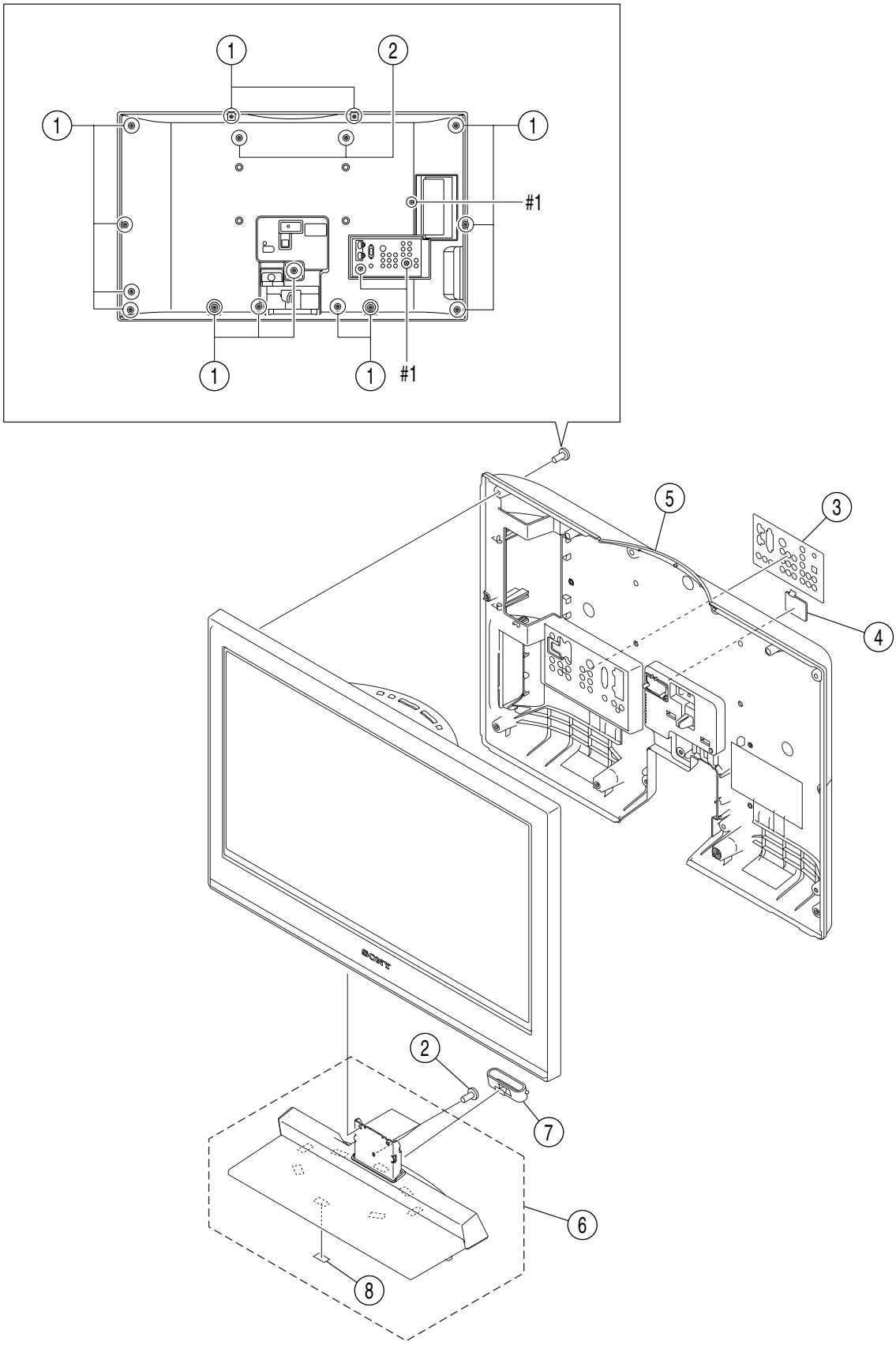

REF. No.	PART No.	DESCRIPTION	MARK
1	2-580-640-01	SCREW, +BVTP2 4X16	
2	2-580-608-01	SCREW, +PSW M5X16	
3	3-213-229-11	REAR, TERMINAL LABEL (KLV-32D300A)	
	3-213-229-01	LABEL, REAR TERMINAL (CH) (KLV-32V300A)	
4	* 3-106-086-01	COVER, ECS	
5	⚠ 3-097-971-01	COVER, REAR (32)	
6	X-2177-108-2	STAND (M-WS-B) ASSY (KLV-32D300A)	8
	X-2177-107-2	STAND (M-WS) ASSY (KLV-32V300A)	8
7	2-595-155-02	CLAMP	
8	3-094-362-01	FOOT (15X30)	
#1	7-685-648-79	SCREW +BVTP 3X12 TYPE2 IT-3	

KLV-32D300A/32V300A
3-1-2. CHASSIS-1

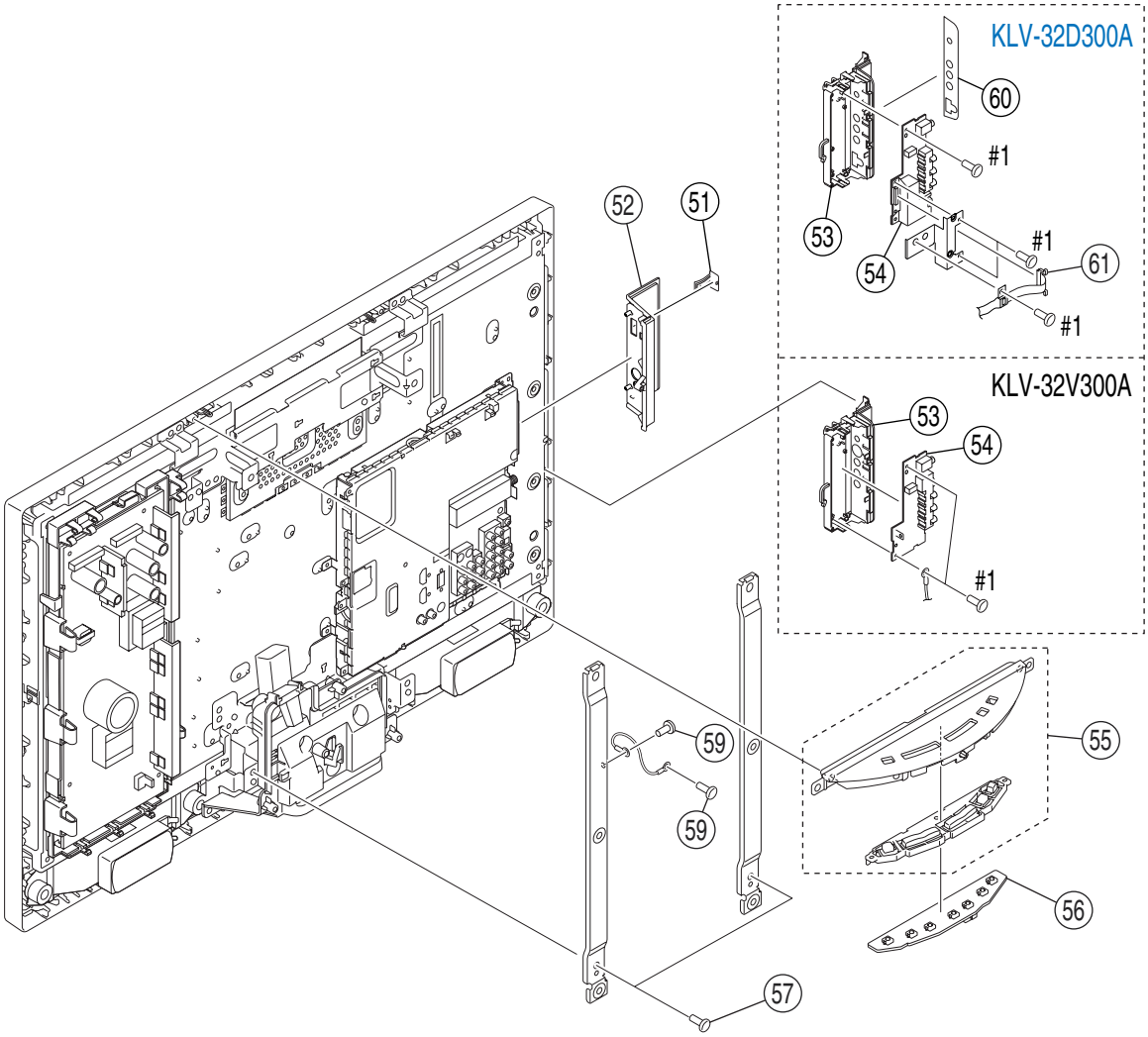

REF. No.	PART No.	DESCRIPTION	MARK
51	2-697-510-04	COVER, MS/USB	
52	3-098-469-21	SIDE, TERMINAL (AG)	
53	3-094-418-81	HOLDER, SIDE JACK (M) (KLV-32D300A)	
	3-094-418-71	HOLDER, SIDE JACK (M) (KLV-32V300A)	
54	A-1310-313-A	U2 MOUNT (KLV-32D300A)	
	A-1283-049-A	U1 MOUNT (KLV-32V300A)	
55	X-2178-763-1	BUTTON, MULTI ASSY	

REF. No.	PART No.	DESCRIPTION	MARK
56	A-1283-046-A	H1 MOUNT	
57	2-580-608-01	SCREW, +PSW M5X16	
59	2-580-629-01	SCREW, +BVST 3X8	
60	3-215-859-01	LABEL, HDMI-SHD (KLV-32D300A)	
61	* 1-833-925-11	LEAD WIRE WITH CONNECTOR (LVDS) (KLV-32D300A)	
#1	7-685-648-79	SCREW, +BVTP 3X12 TYPE2 IT-3	

KLV-32D300A/32V300A
3-1-3. CHASSIS-2

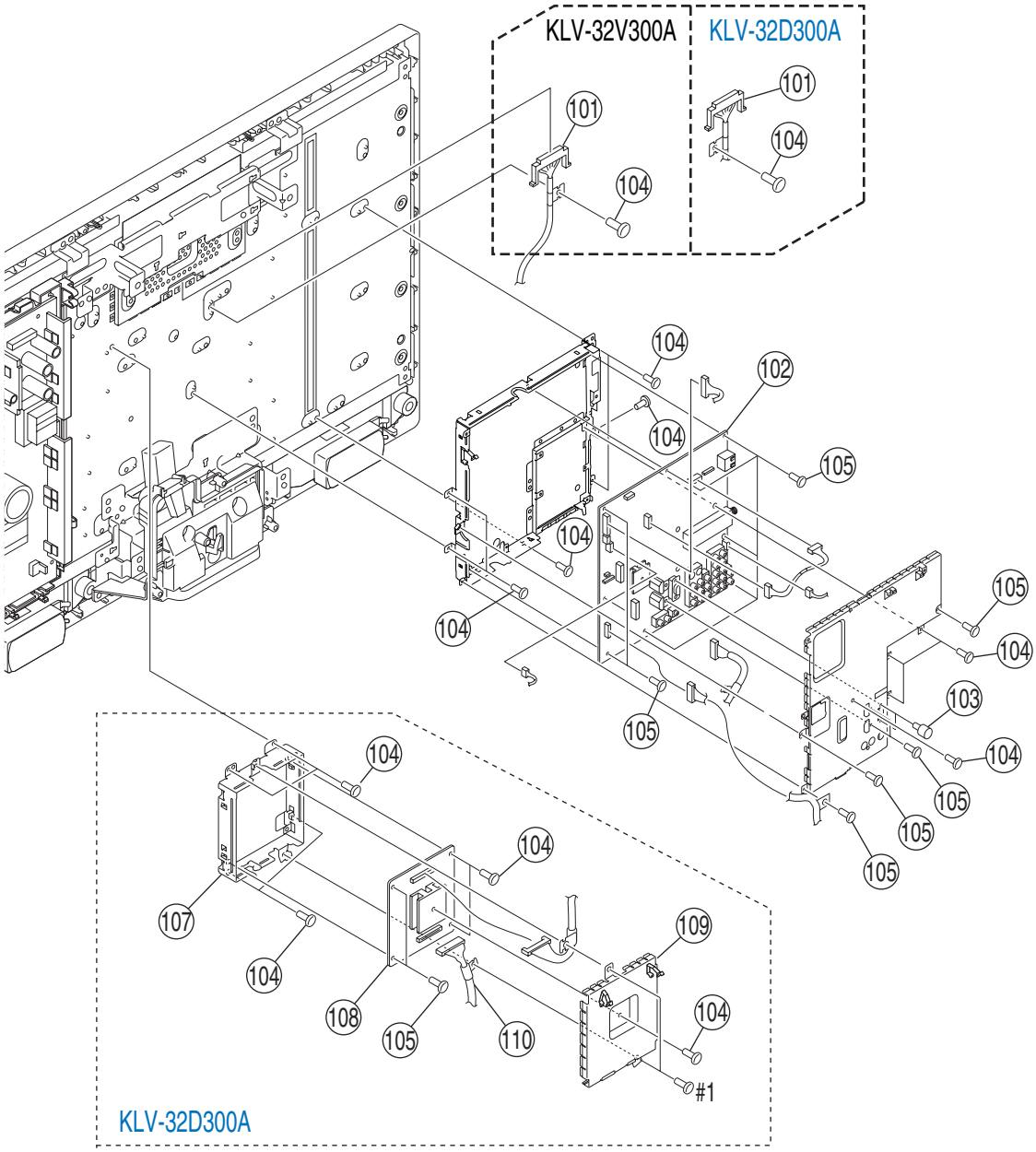

The components identified by mark 🔒 contain confidential information. Strictly follow the instructions whenever the components are repaired and/or replaced.

REF. No.	PART No.	DESCRIPTION	MARK
101	1-834-188-11	LEAD WIRE WITH CONNECTOR (LVDS) (KLV-32D300A)	
	1-834-157-11	HARNESS WITH CONNECTOR (LVDS) (KLV-32V300A)	
102	🔒 A-1289-437-A	BG1/UT MOUNT (KLV-32D300A)	
	🔒 A-1271-129-A	BG1/UT MOUNT (KLV-32V300A)	
103	4-635-966-01	SCREW (HEX)	
104	2-580-591-01	SCREW, +PSW M3X5	
105	2-580-629-01	SCREW, +BVST 3X8	

REF. No.	PART No.	DESCRIPTION	MARK
107	3-094-377-01	HFR, SHD (LOWER) (KLV-32D300A)	
108	A-1319-503-A	BH MOUNT (KLV-32D300A)	
109	3-094-376-01	HFR, SHD (UPPER) (KLV-32D300A)	
110	1-833-964-11	HARNESS WITH CONNECTOR (LVDS) (KLV-32D300A)	
#1	7-685-648-79	SCREW, +BVTP 3X12 TYPE2 IT-3	

KLV-32D300A/32V300A
3-1-4. CHASSIS-3

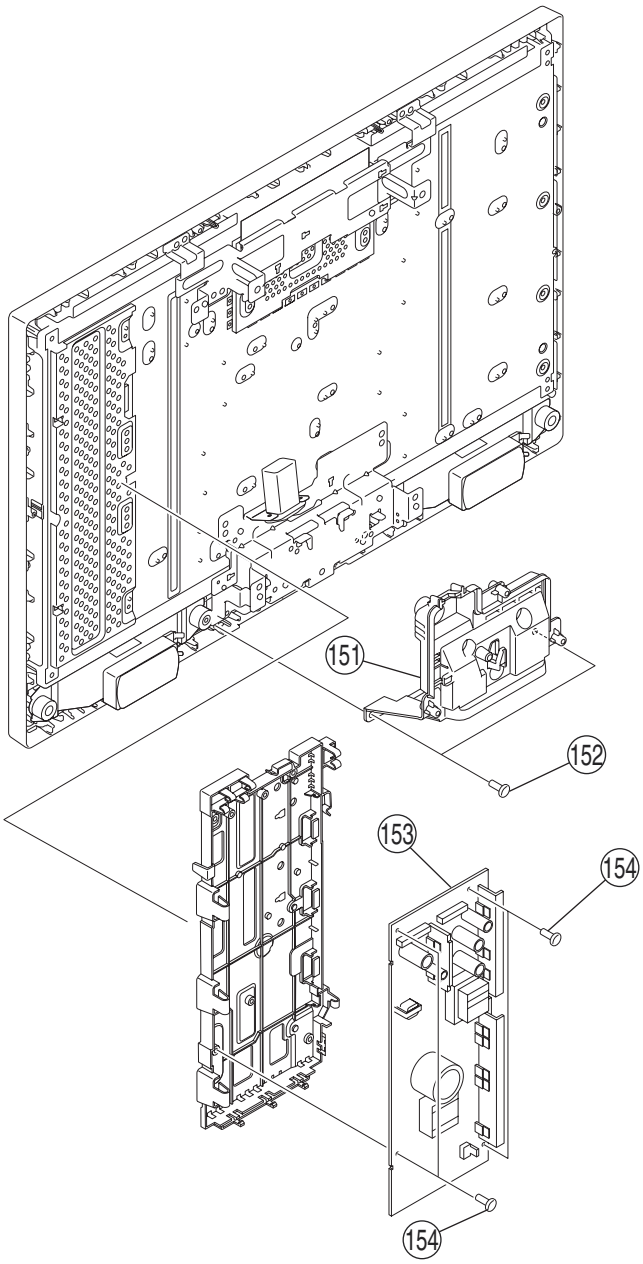

REF. No.	PART No.	DESCRIPTION	MARK
151	⚠ 3-106-082-01	COVER, UNDER (M)	
152	2-580-640-01	SCREW, +BVTP2 4X16	
153	⚠ A-1289-455-A	G1H 32 COMPL	
154	2-674-965-31	SCREW, +PSW 3SG	

REF. No.	PART No.	DESCRIPTION	MARK

KLV-32D300A/32V300A
3-1-5. SPEAKER

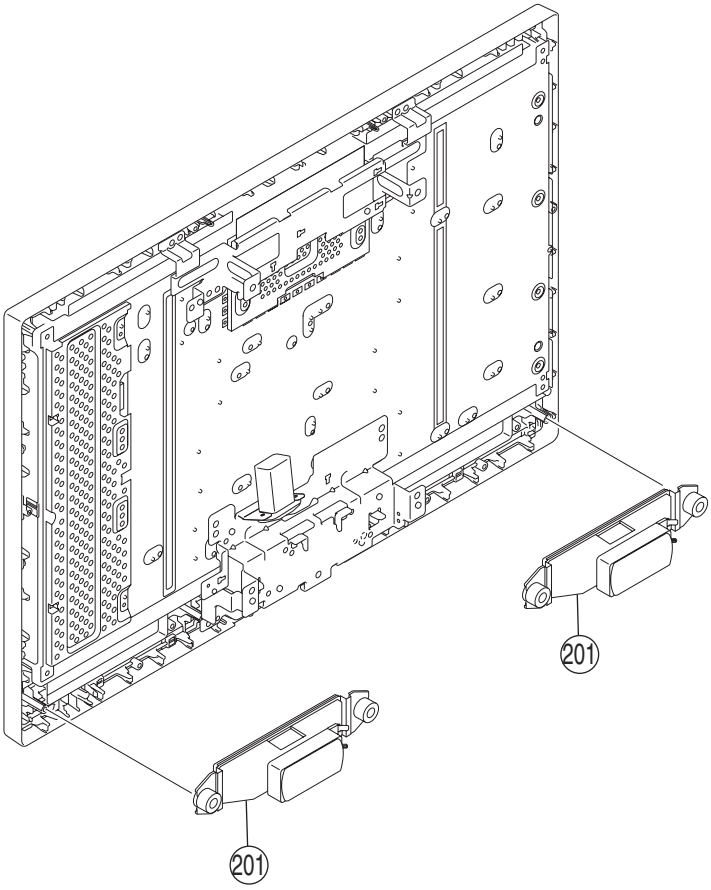

REF. No.	PART No.	DESCRIPTION	MARK
201	1-826-648-11	LOUD SPEAKER (4.2X15CM)	

REF. No.	PART No.	DESCRIPTION	MARK

KLV-32D300A/32V300A

3-1-6. BEZEL ASSY AND LCD PANEL

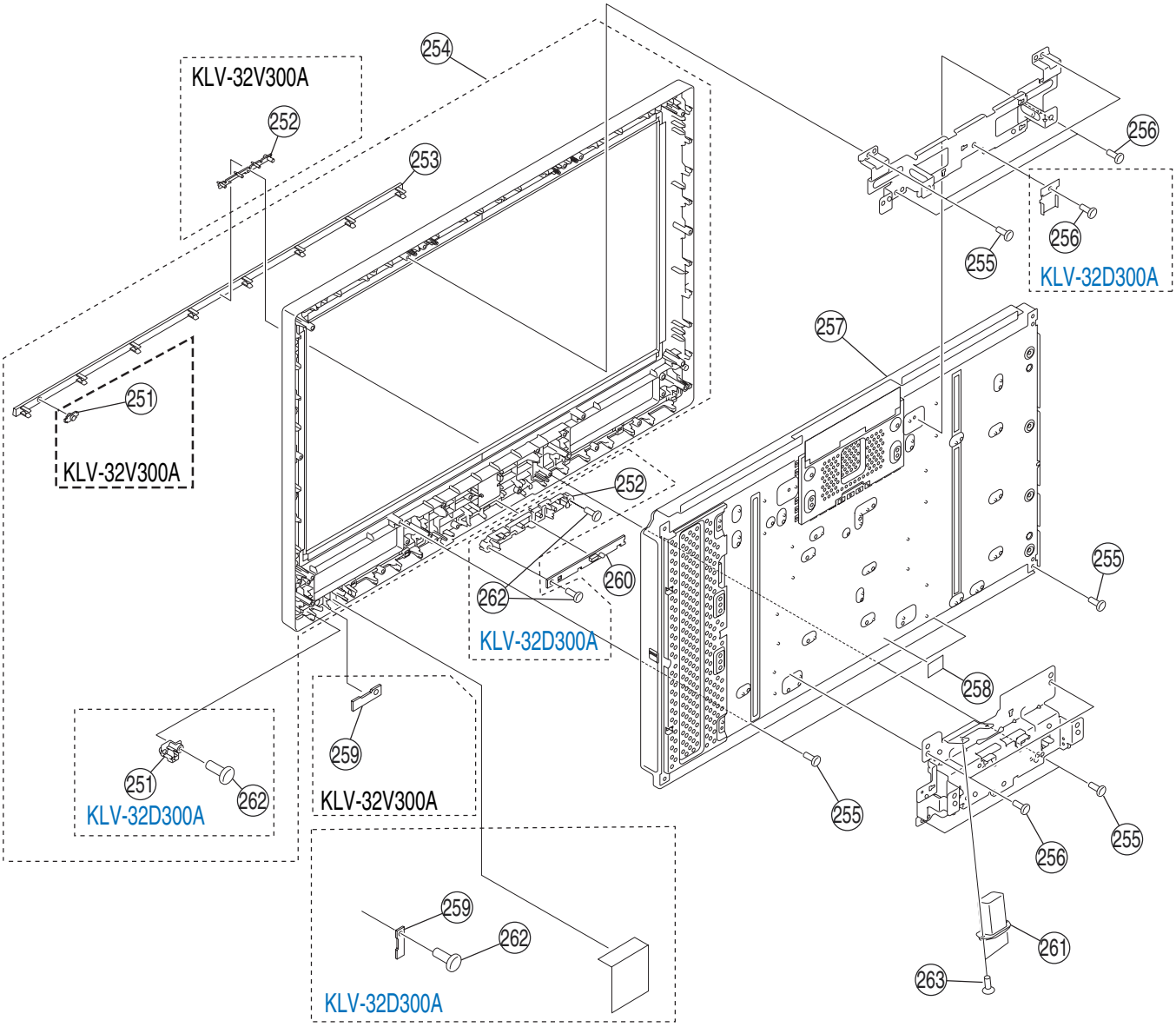

REF. No.	PART No.	DESCRIPTION	MARK
251	3-094-435-01	GUIDE, LIGHT (D) (KLV-32D300A)	
	3-113-967-01	GUIDE, LIGHT (S) L (KLV-32V300A)	
252	3-096-949-02	GUIDE, LED (D) (KLV-32D300A)	
	3-106-092-01	GUIDE, LED (S) (KLV-32V300A)	
253	3-100-093-01	ORNAMENTAL PANEL (32D) (KLV-32D300A)	
	3-094-448-49	PANEL, ORNAMENTAL (32S) (KLV-32V300A)	
254	⚠ X-2178-847-1	BEZEL (32DC) ASSY (KLV-32D300A)	251, 253
	⚠ X-2178-765-1	BEZEL (32SC) ASSY (KLV-32V300A)	251, 253
255	2-580-640-01	SCREW, +BVTP2 4X16	

REF. No.	PART No.	DESCRIPTION	MARK
256	2-580-600-01	SCREW, +PSW M4X8	
257	⚠ 1-802-411-11	LCD PANEL (32INCH WXGA TFT) (KLV-32D300A)	
	⚠ 1-802-380-13	LCD PANEL (32INCH WXGA TFT) (KLV-32V300A)	
258	4-092-814-21	CUSHION D	
259	A-1283-048-A	H4 MOUNT	
260	A-1283-047-A	H3 MOUNT	
261	⚠ 1-819-729-14	INLET, AC (WITH NOISE FILTER)	
262	3-703-136-12	SCREW, TAPPING	
263	2-596-649-01	+KTT 3X10 (S TYPE)	

3-2. KLV-40/46D300A, 40/46V300A, 40/46V380A

3-2-1. REAR COVER AND STAND ASSY

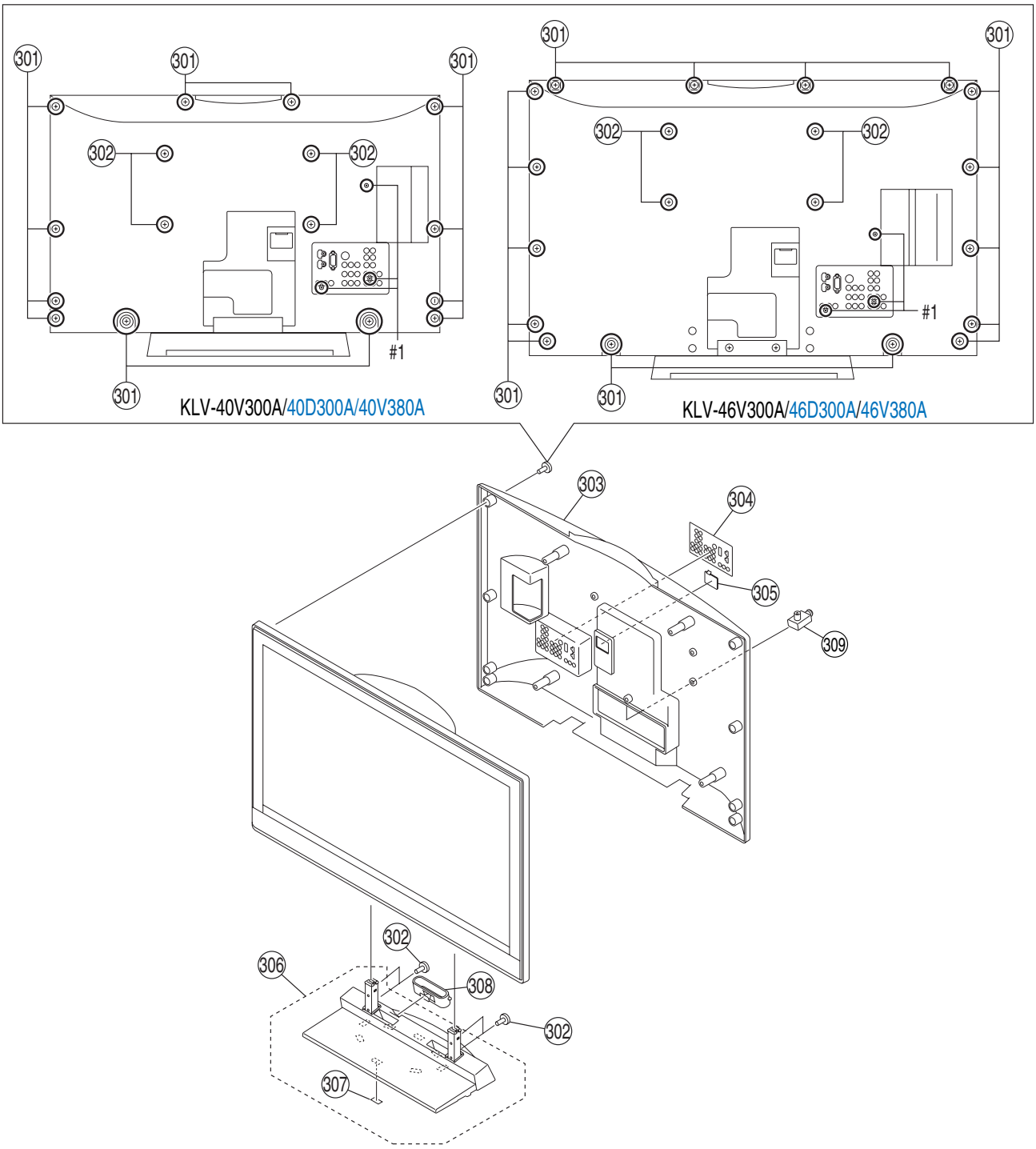

REF. No.	PART No.	DESCRIPTION	MARK
301	2-580-640-01	SCREW, +BVTP2 4X16	
302	2-580-608-01	SCREW, +PSW M5X16	
303	⚠ 3-217-083-01	COVER, REAR (40) (KLV-40D300A/40V380A)	
	⚠ 3-074-468-01	COVER, REAR (40) (KLV-40V300A)	
	⚠ 3-098-011-01	COVER, REAR(46V) (KLV-46V300A/46D300A/46V380A)	
304	3-213-229-11	LABEL, REAR TERMINAL (KLV-40/46D300A, 40/46V380A)	
	3-213-229-01	LABEL, REAR TERMINAL (KLV-40/46V300A)	
305	* 3-106-086-01	COVER, ECS	

REF. No.	PART No.	DESCRIPTION	MARK
306	X-2177-109-2	STAND (ML-WS-B) ASSY (KLV-40D300A)	307
	X-2177-234-2	STAND (ML-WS) ASSY (KLV-40V300A)	307
	X-2177-632-1	STAND (L WS B) ASSY (KLV-46D300A)	307
	X-2177-864-1	STAND (L_WS) ASSY (KLV-46V300A)	307
	X-2189-327-1	STAND (ML-WS-B) ASSY (KLV-40V380A)	307
	X-2189-328-1	STAND (L-WS-B) ASSY (KLV-46V380A)	307
307	3-094-362-01	FOOT (15X30)	
308	2-595-155-02	CLAMP	
309	1-754-544-11	ANTENNA (FOR ISOLATION) (KLV-40/46V380A)	
#1	7-685-648-79	SCREW +BVTP 3X12 TYPE2 IT-3	

KLV-40/46D300A, 40/46V300A, 40/46V380A
3-2-2. CHASSIS-1

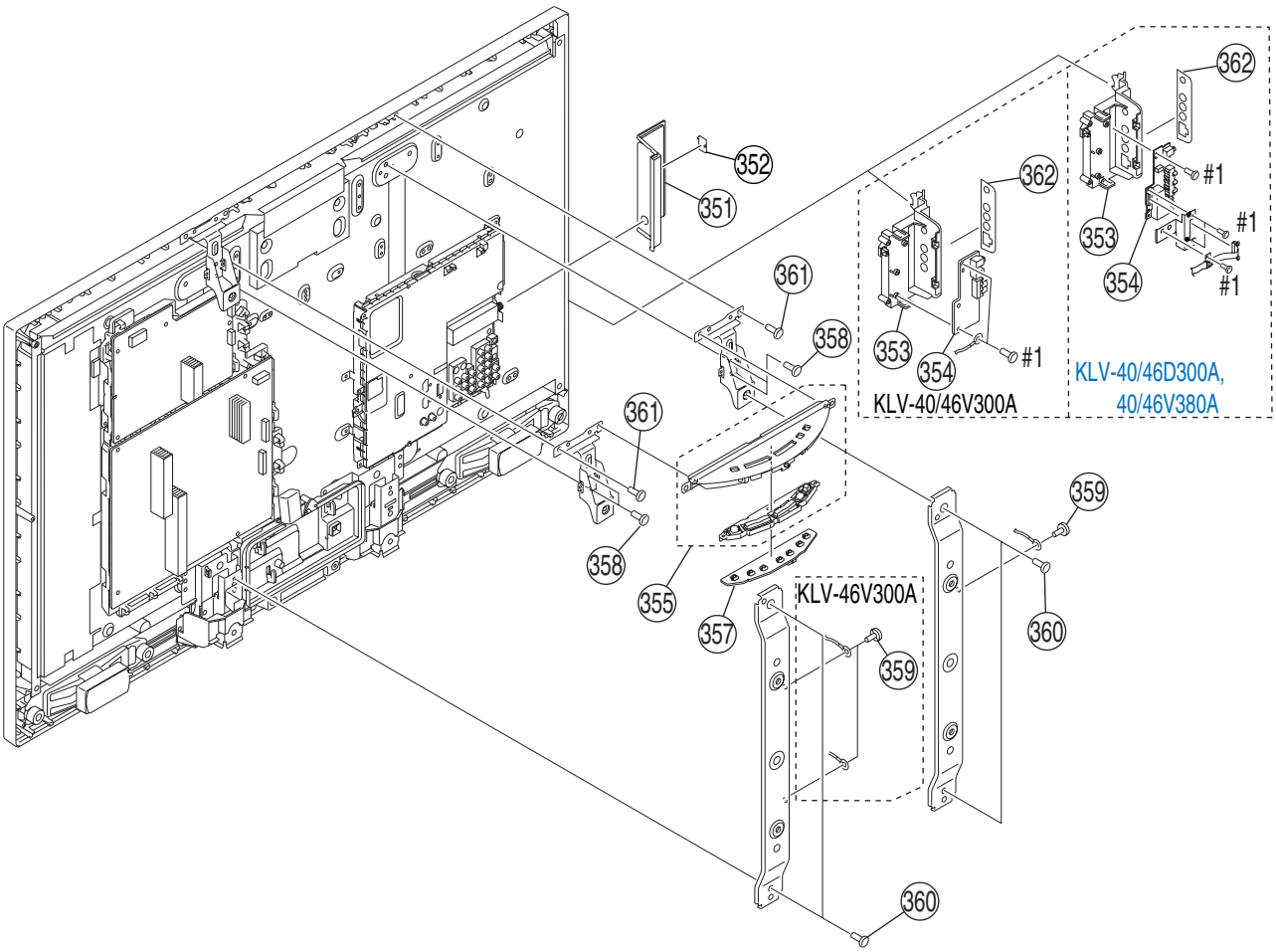

REF. No.	PART No.	DESCRIPTION	MARK
351	3-093-469-21	SIDE, TERMINAL(AG) (KLV-40/46D300A, 40/46V300A)	
	3-098-469-22	SIDE TERMINAL (AG) (KLV-40/46V380A)	
352	2-697-510-04	COVER, MS/USB	
353	3-094-418-81	HOLDER, SIDE JACK (M) (KLV-40D300A/40V380A)	
	3-074-418-71	HOLDER, SIDE JACK (M) (KLV-40V300A)	
	3-106-085-21	HOLDER, SIDE JACK (L) ASSY (KLV-46V300A)	
	3-106-085-31	HOLDER, SIDE JACK (L) (KLV-46D300A)	
	3-106-085-32	HOLDER, SIDE JACK (L) (KLV-46V380A)	
354	A-1310-313-A	U2 MOUNT (KLV-40/46D300A)	
	A-1283-049-A	U1 MOUNT (KLV-40/46V300A)	
	A-1439-459-A	U2B MOUNT (KLV-40/46V380A)	
355	X-2178-763-1	BUTTON, MULTI ASSY (KLV-40/46D300A, 40/46V300A)	
	X-2178-763-2	BUTTON, MULTI ASSY (KLV-40/46V380A)	

REF. No.	PART No.	DESCRIPTION	MARK
356	* 1-910-036-55	CONNECTOR ASSY GND 1P	
357	A-1283-046-A	H1 MOUNT	
358	2-580-606-01	SCREW, +PSW M5X8	
359	2-580-629-01	SCREW, +BVST 3X8	
360	2-580-608-01	SCREW, +PSW M5X16	
361	2-580-640-01	SCREW, +BVTP2 4X16	
362	3-215-859-01	LABEL, HDMI SHD	
#1	7-685-648-79	SCREW +BVTP 3X12 TYPE2 IT-3	

KLV-40/46D300A, 40/46V300A, 40/46V380A

3-2-3. CHASSIS-2

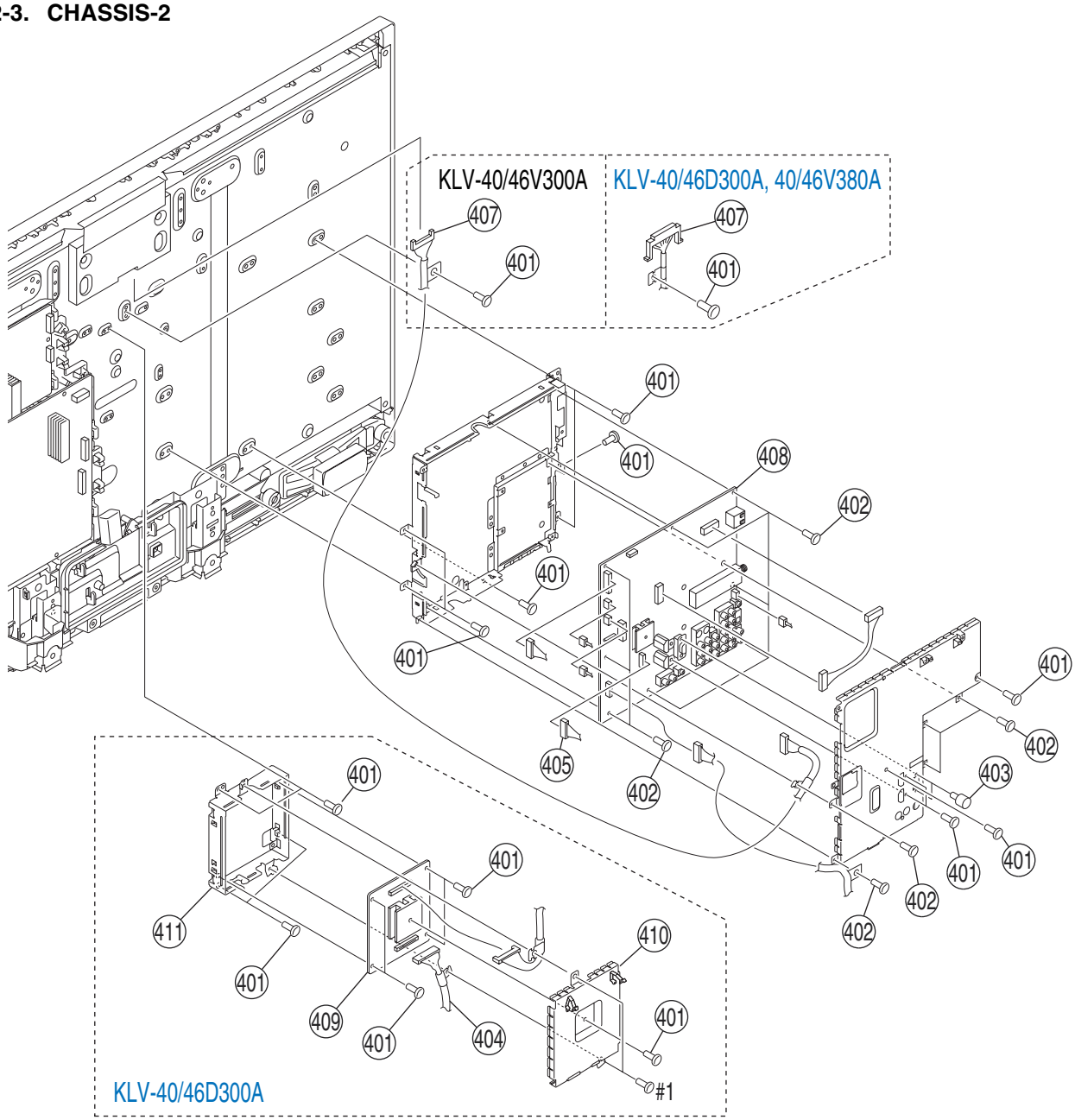

The components identified by mark 🔒 contain confidential information. Strictly follow the instructions whenever the components are repaired and/or replaced.

REF. No.	PART No.	DESCRIPTION	MARK
401	2-580-591-01	SCREW, +PSW M3X5	
402	2-580-629-01	SCREW, +BVST 3X8	
403	4-635-966-01	SCREW (HEX) (KLV-40/46D300A, 40/46V300A)	
	2-580-626-01	SCREW, SP4-40 UNC (KLV-40/46V380A)	
404	1-833-962-11	HARNESS WITH CONNECTOR (LVDS) (KLV-40/46D300A)	
405	* 1-833-926-11	LEAD WIRE WITH CONNECTOR (LVDS) (KLV-40D300A/40V380A)	
	* 1-833-924-11	LEAD WIRE WITH CONNECTOR (LVDS) (KLV-46D300A/46V380A)	
407	1-833-960-11	LEAD WIRE WITH CONNECTOR (LVDS) (KLV-40/46D300A)	
	1-834-158-11	HARNESS WITH CONNECTOR (LVDS) (KLV-40V300A)	
	1-834-159-11	HARNESS WITH CONNECTOR (LVDS) (KLV-46V300A)	
	1-835-014-11	LEAD WIRE WITH CONNECTOR (KLV-40V380A)	
	1-835-015-11	LEAD WIRE WITH CONNECTOR (KLV-46V380A)	
408 ⚠ 🔒	A-1289-438-A	BG1/UT COMPL (KLV-40D300A)	
⚠ 🔒	A-1257-032-A	BG1/UT COMPL (KLV-40V300A)	
⚠ 🔒	A-1289-439-A	BG1/UT MOUNT (KLV-46D300A)	
⚠ 🔒	A-1271-128-A	BG1/UT COMPL (KLV-46V300A)	
⚠ 🔒	A-1439-291-C	BG1F MOUNT (KLV-40V380A)	
⚠ 🔒	A-1439-292-C	BG1F MOUNT (KLV-46V380A)	
409	A-1319-503-A	BH MOUNT (KLV-40/46D300A)	
410	3-094-376-01	HFR, SHD (UPPER) (KLV-40/46D300A)	
411	3-094-377-01	HFR, SHD (LOWER) (KLV-40/46D300A)	
#1	7-685-648-79	SCREW +BVTP 3X12 TYPE2 IT-3	

KLV-40/46D300A, 40/46V300A, 40/46V380A
3-2-4. CHASSIS-3

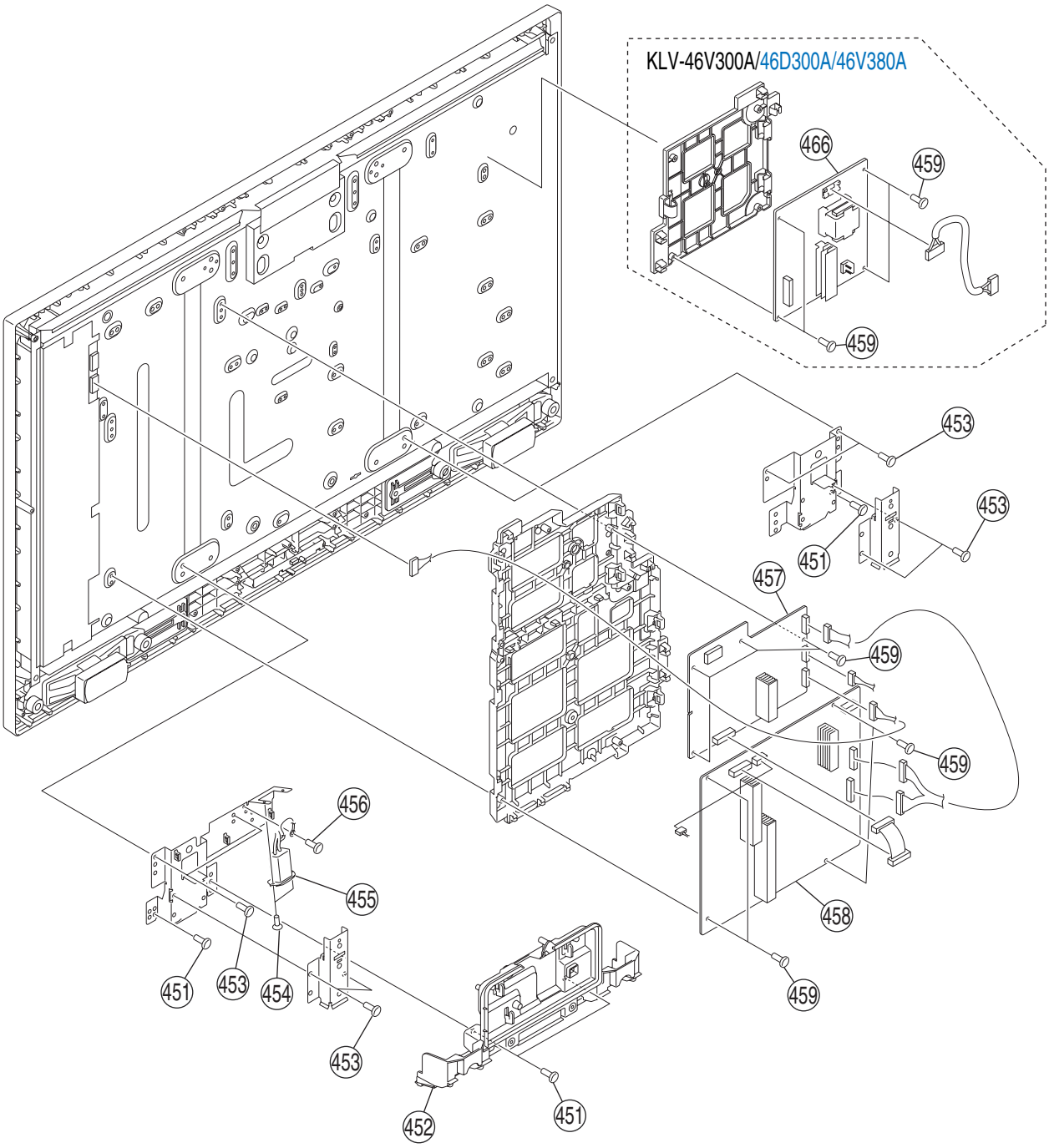

REF. No.		PART No.	DESCRIPTION	MARK
451		2-580-640-01	SCREW, +BVTP2 4X16	
452	⚠	3-106-083-01	COVER, UNDER (L)	
453		2-580-607-01	SCREW, +PSW M5X12	
454		2-596-649-01	+KTT 3X10 (S TYPE)	
455	⚠	1-819-729-14	INLET, AC (WITH NOISE FILTER)	

REF. No.		PART No.	DESCRIPTION	MARK
456		2-580-600-01	SCREW, +PSW M4X8	
457	⚠	A-1236-528-B	D1 40 COMPL (KLV-40D300A)	
	⚠	A-1236-528-A	D1 40 COMPL (KLV-40V300A)	
	⚠	A-1236-531-C	D1 46 COMPL (KLV-46D300A)	
	⚠	A-1236-531-A	D1 46 COMPL (KLV-46V300A)	
	⚠	A-1436-085-A	DF1 COMPL (KLV-40V380A)	
	⚠	A-1314-490-A	DF2 MOUNT (KLV-46V380A)	
458	⚠	A-1314-501-D	G3 COMPL	
459		2-674-965-41	SCREW, +PSW 3SG	
466	⚠	A-1247-497-A	D2 COMPL (KLV-46V300A)	
	⚠	A-1247-497-C	D2 COMPL (KLV-46D300A)	
	⚠	A-1314-051-A	D3 MOUNT (KLV-46V380A)	

KLV-40/46D300A, 40/46V300A, 40/46V380A

3-2-5. SPEAKER

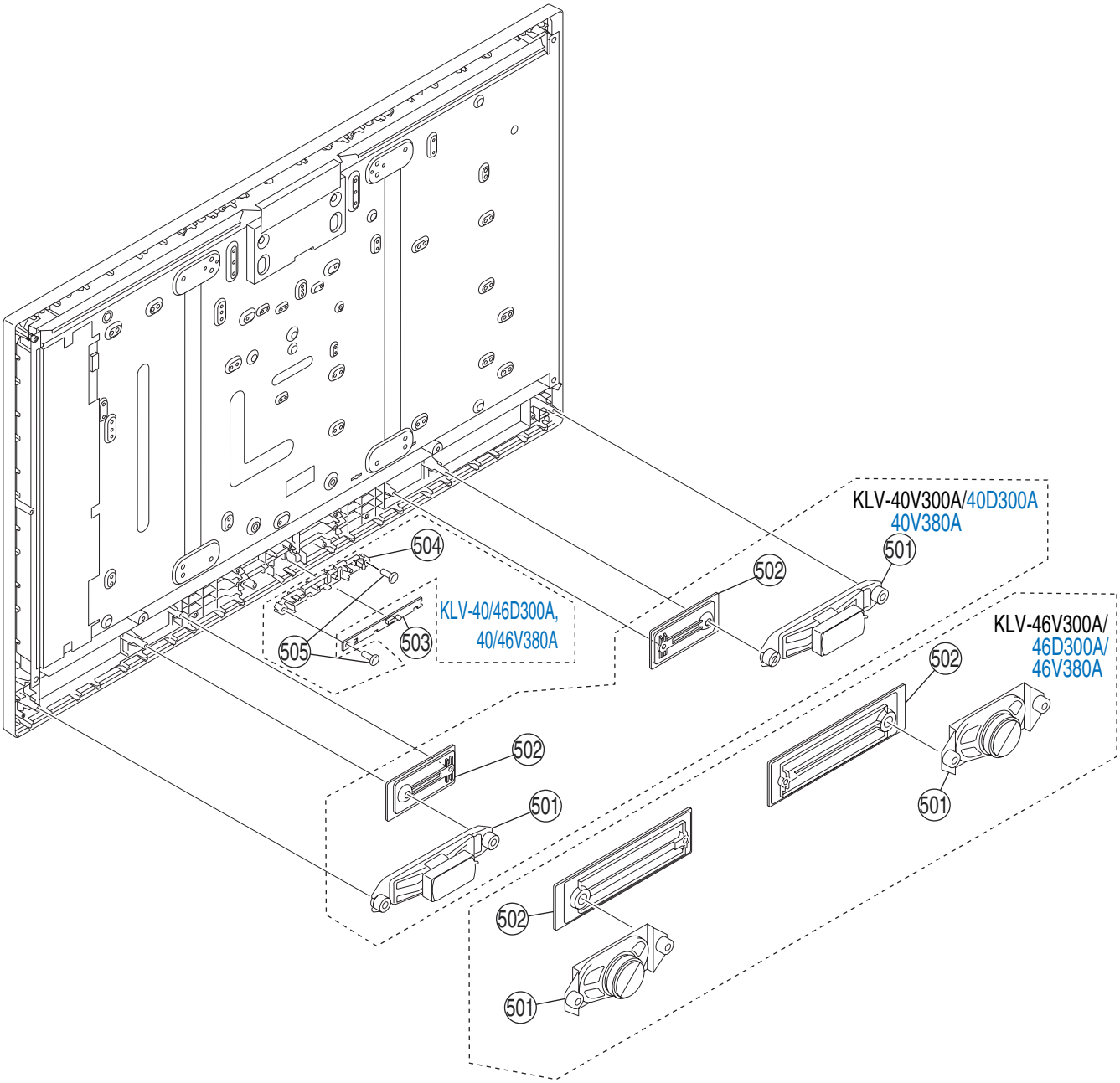

REF. No.	PART No.	DESCRIPTION	MARK
501	1-826-647-11	LOUD SPEAKER (5.5X15.5CM) (KLV-40D300A/40V300A)	
	1-826-646-11	LOUD SPEAKER (13X7CM) (KLV-40D300A/46V300A)	
502	X-2176-950-1	BAFFLE (40J) ASSY (KLV-40D300A/40V300A/40V380A)	
	X-2176-951-1	BAFFLE (46J) ASSY (KLV-40D300A/46V300A)	
	X-2189-250-1	BAFFLE (46) ASSY (KLV-46V380A)	
503	A-1283-047-A	H3 MOUNT	
504	3-096-949-02	GUIDE, LED (D) (KLV-40/46D300A)	
	3-106-092-01	GUIDE, LED (S) (KLV-40/46V380A)	
505	3-703-136-12	SCREW, TAPPING (KLV-40/46D300A)	

REF. No.	PART No.	DESCRIPTION	MARK

KLV-40/46D300A, 40/46V300A, 40/46V380A
3-2-6. BEZEL ASSY AND LCD PANEL

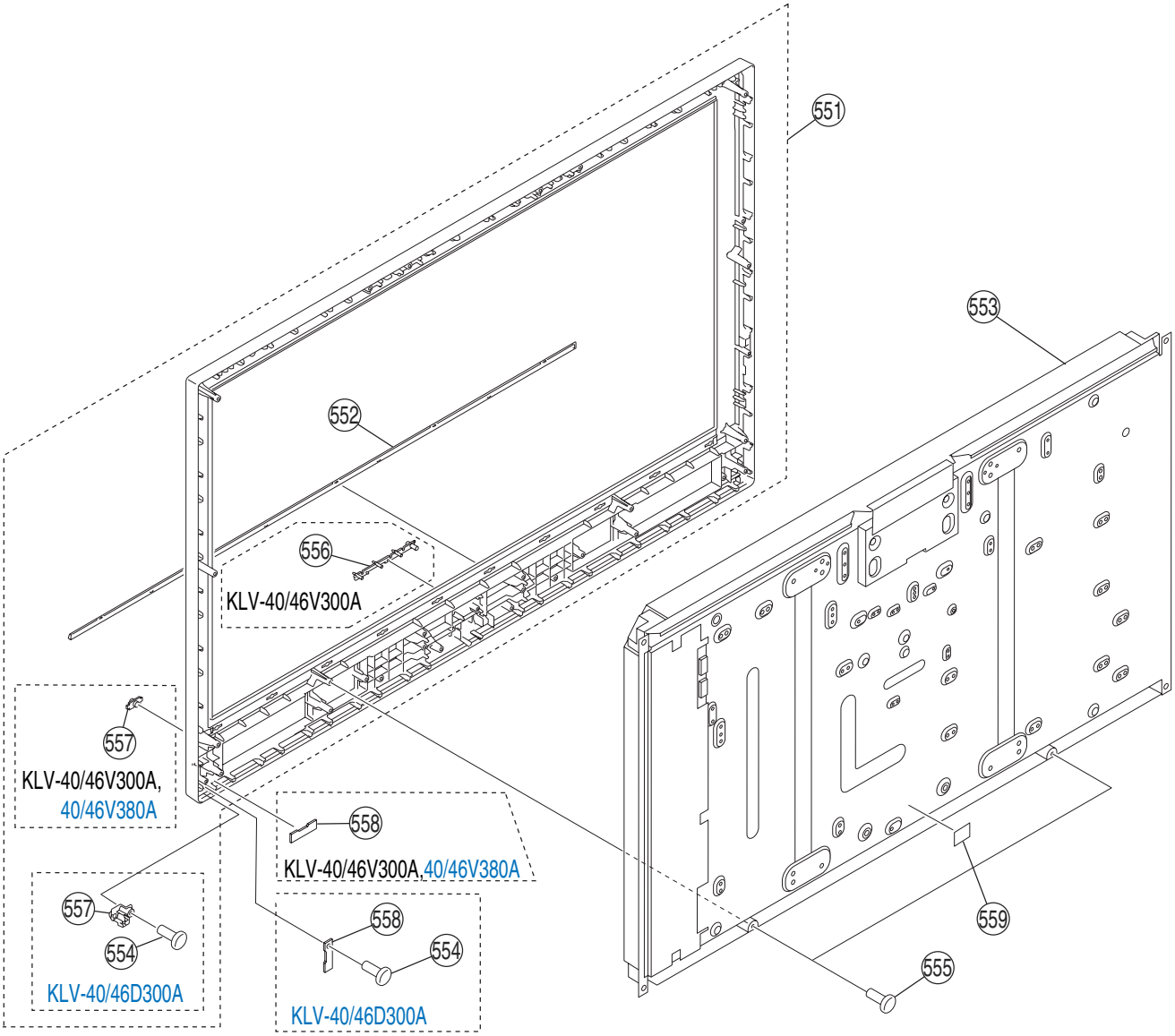

REF. No.		PART No.	DESCRIPTION	MARK
551	⚠	X-2178-848-1	BEZEL (40DC) ASSY (KLV-40D300A)	552, 554, 557
	⚠	X-2178-766-1	BEZEL (40SC) ASSY (KLV-40V300A)	552, 556, 557
	⚠	X-2178-849-1	BEZEL (46DC) ASSY (KLV-46D300A)	552, 554, 557
	⚠	X-2178-767-1	BEZEL (46SC) ASSY (KLV-46V300A)	552, 556, 557
	⚠	X-2189-287-1	BEZEL (40SC) ASSY (KLV-40V380A)	552, 556, 557
	⚠	X-2189-288-1	BEZEL (46SC) ASSY (KLV-46V380A)	552, 556, 557
552		3-100-094-01	ORNAMENTAL PANEL (40D) (KLV-40D300A)	
		3-094-449-41	ORNAMENTAL PANEL (40S) (KLV-40V300A)	
		3-100-095-01	ORNAMENTAL PANEL (46D) (KLV-46D300A)	
		3-094-450-21	ORNAMENTAL PANEL (46S) (KLV-46V300A)	
		3-094-449-71	ORNAMENTAL PANEL (40S) (KLV-40V380A)	
		3-094-450-41	ORNAMENTAL PANEL (46S) (KLV-46V380A)	

REF. No.		PART No.	DESCRIPTION	MARK
553	⚠	1-802-414-11	LCD PANEL (40INCH WXGA TFT) (KLV-40D300A)	
	⚠	1-802-410-11	LCD PANEL (40INCH WXGA TFT) (KLV-40V300A)	
	⚠	1-802-413-11	LCD PANEL (46 INCH WXGA TFT) (KLV-46D300A)	
	⚠	1-802-409-11	LCD PANEL (46INCH WXGA TFT) (KLV-46V300A)	
	⚠	1-802-488-13	LCD PANEL (40INCH FHD TFT) (KLV-40V380A)	
	⚠	1-802-486-12	LCD PANEL (46INCH FHD TFT) (KLV-46V380A)	
554		3-703-136-12	SCREW, TAPPING (KLV-40D300A)	
555		2-580-640-01	SCREW, +BVTP2 4X16	
556		3-106-092-01	GUIDE, LED(S) (KLV-40/46V300A)	
557		3-094-435-01	GUIDE, LIGHT (D) (KLV-40/46D300A)	
		3-113-967-01	GUIDE, LIGHT (S) L (KLV-40/46V300A, 40/46V380A)	
558		A-1283-048-A	H4 MOUNT	
559		4-092-814-21	CUSHION D	

3-3. PACKING MATERIALS (KLV-32D300A/32V300A)

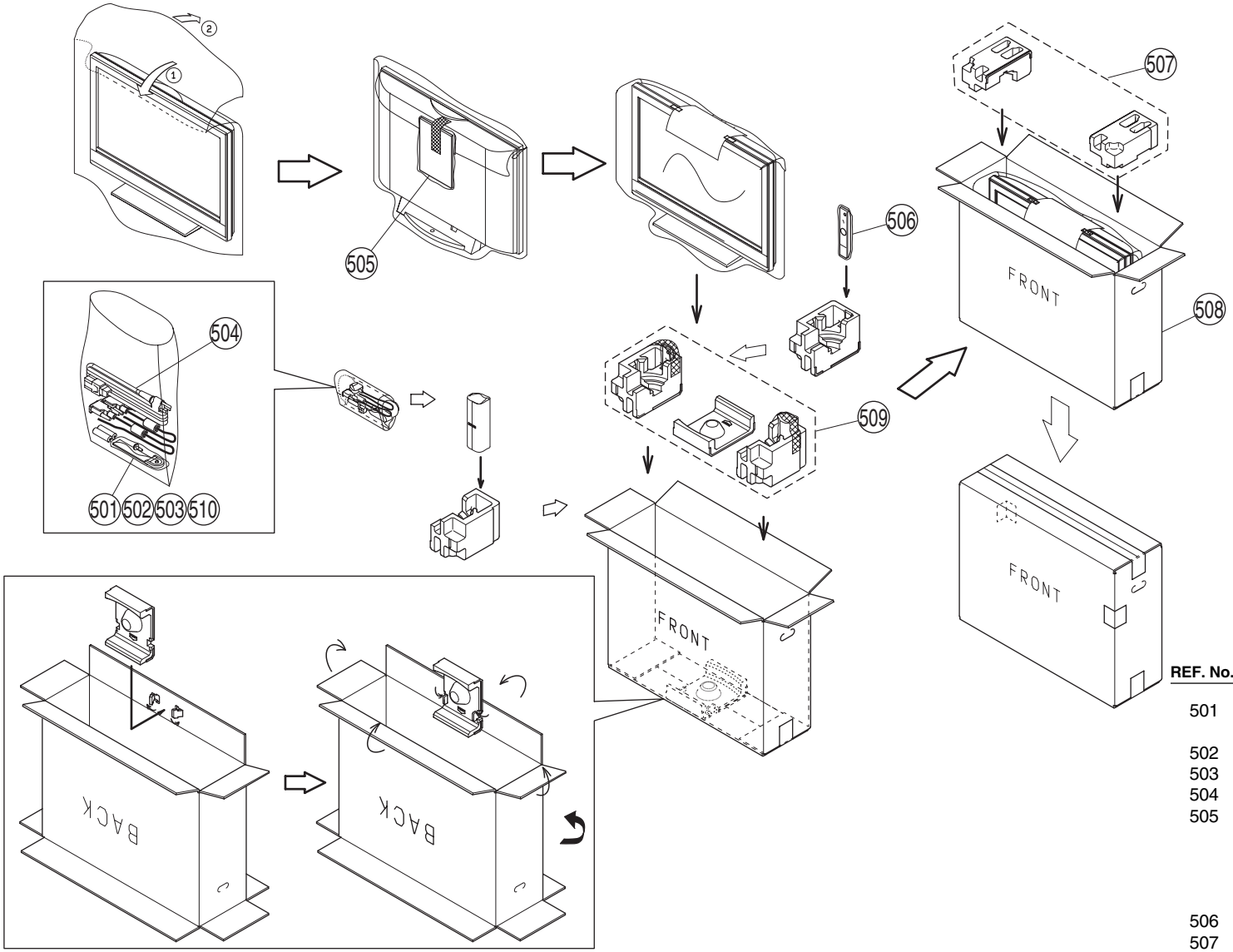

REF. No.		PART No.	DESCRIPTION	MARK
501	*	X-2102-511-2	BAG ASSY, RUDDER LOCK	502, 503
502		2-580-663-01	SCREW, WOOD 3.8X20	
503		2-593-320-02	SCREW, CION (M6X18)	
504		1-833-005-11	AC POWER-SUPPLY CORD	
505		3-215-862-11	MANUAL, INSTRUCTION (KLV-32V300A)	
		3-211-551-12	MANUAL, INSTRUCTION (KLV-32D300A)	
506		1-480-278-11	REMOTE COMMANDER (RM-SA011)	
507	*	3-215-452-01	CUSHION,UPPER	
508	*	3-215-453-01	INDIVIDUAL,CARTON (KLV-32V300A)	
	*	3-215-732-01	INDIVIDUAL, CARTON (KLV-32D300A)	
509	*	3-215-451-01	CUSHION,LOWER	
510		1-831-554-11	CABLE ASSY 15P (DSUB CONNECTOR)	

3-4. PACKING MATERIALS (KLV-40D300A/40V300A/40V380A)

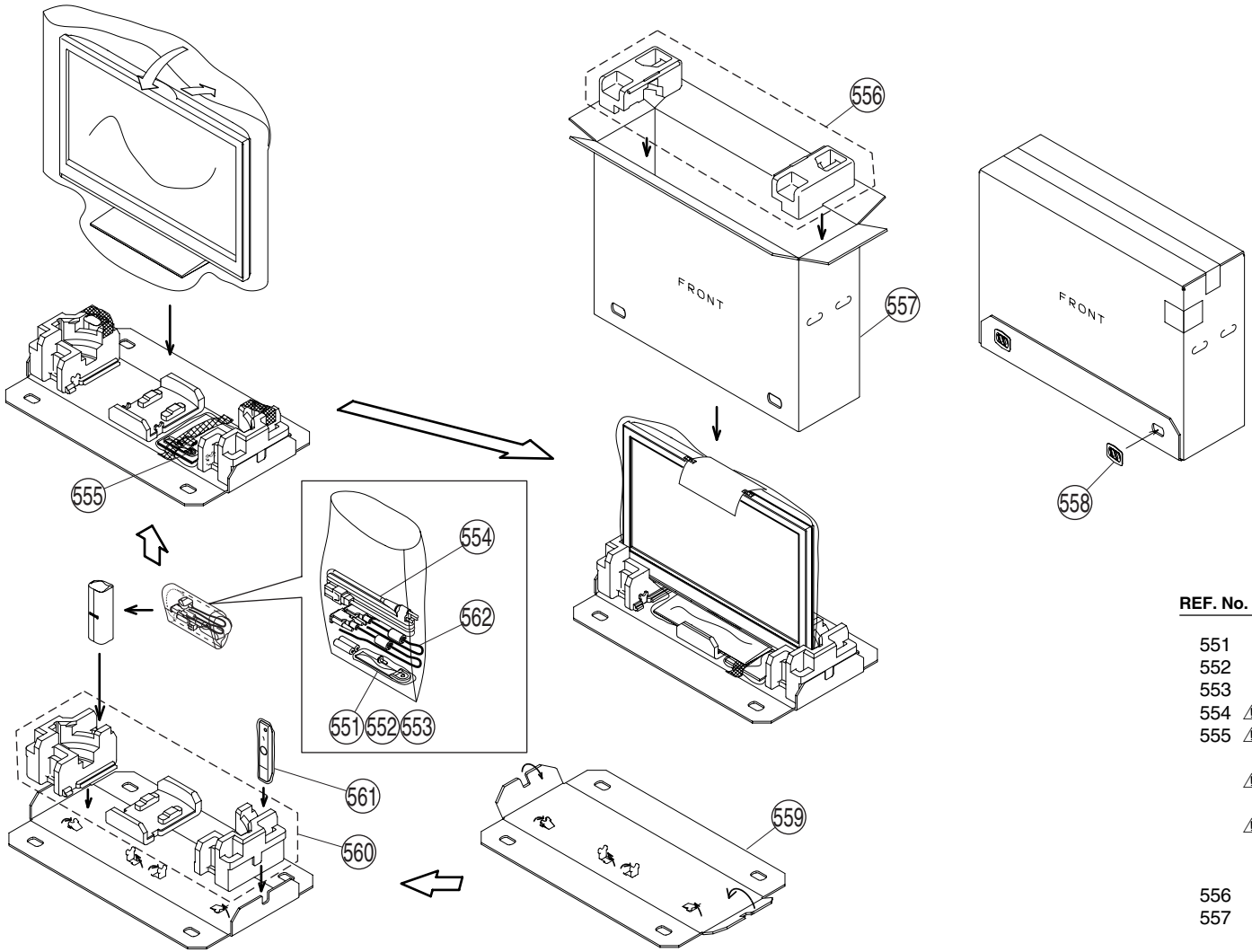

REF. No.	PART No.	DESCRIPTION	MARK
551	* X-2102-511-2	BAG ASSY, RUDDER LOCK	
552	2-580-663-01	SCREW, WOOD 3.8X20	
553	2-593-320-02	SCREW, CION (M6X18)	
554	⚠ 1-830-860-31	CORD, POWER	
555	⚠ 3-215-862-11	MANUAL, INSTRUCTION (KLV-40V300A)	
	⚠ 3-211-551-11	MANUAL, INSTRUCTION (KLV-40D300A)	
	⚠ 3-285-076-11	MANUAL, INSTRUCTION (KLV-40V380A)	
556	* 3-215-458-01	CUSHION, UPPER	
557	* 3-215-459-01	INDIVIDUAL, CARTON (KLV-40V300A)	
	* 3-215-733-01	INDIVIDUAL, CARTON (KLV-40D300A)	
	* 3-295-374-01	INDIVIDUAL, CARTON (KLV-40V380A)	
558	* 4-081-035-01	JOINT	
559	* 3-217-227-01	TRAY	
560	* 3-215-457-01	CUSHION, LOWER	
561	1-480-278-11	REMOTE COMMANDER (RM-SA011)	
562	1-831-554-11	CABLE ASSY (15P DSUB CONNECTOR)	

3-5. PACKING MATERIALS (KLV-46D300A/46V300A/46V380A)

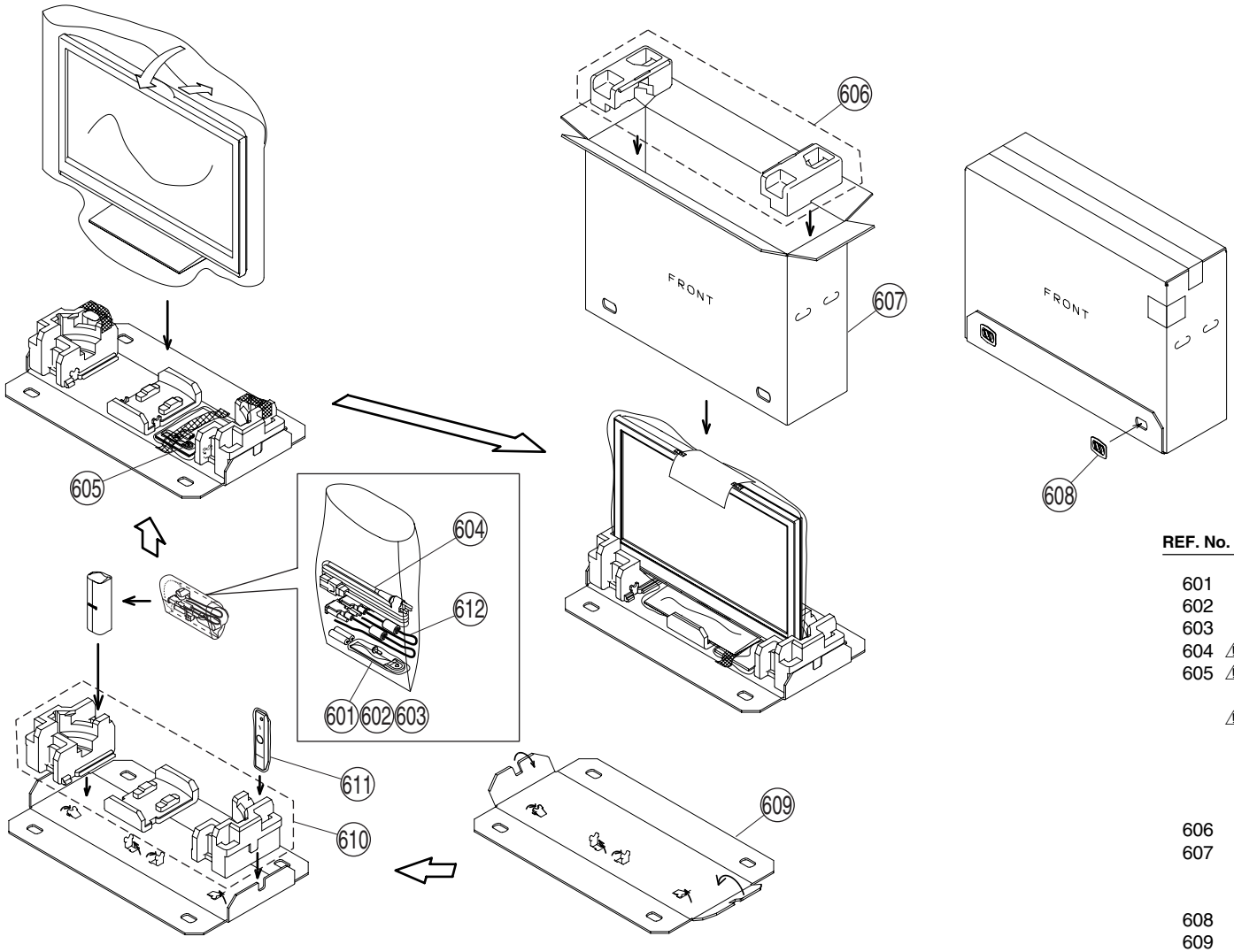

REF. No.		PART No.	DESCRIPTION	MARK
601	*	X-2102-511-2	BAG ASSY, RUDDER LOCK	
602		2-580-663-01	SCREW, WOOD 3.8X20	
603		2-593-320-02	SCREW, CION (M6X18)	
604	⚠	1-830-860-31	CORD, POWER	
605	⚠	3-215-862-11	MANUAL, INSTRUCTION (KLV-46V300A)	
	⚠	3-211-551-11	MANUAL, INSTRUCTION (KLV-46D300A)	
		3-285-076-11	MANUAL, INSTRUCTION (KLV-46V380A)	
606	*	3-215-475-01	CUSHION, UPPER	
607	*	3-215-476-01	INDIVIDUAL, CARTON (KLV-46V300A)	
	*	3-215-734-01	INDIVIDUAL, CARTON (KLV-46D300A)	
	*	3-295-375-01	INDIVIDUAL, CARTON (KLV-46V380A)	
608	*	4-081-035-01	JOINT	
609	*	3-215-477-01	TRAY	
610	*	3-215-474-01	CUSHION, LOWER	
	*	3-215-474-02	CUSHION, LOWER (KLV-46V380A)	
611		1-480-278-11	REMOTE COMMANDER (RM-SA011)	
612		1-831-554-11	CABLE ASSY (15P DSUB CONNECTOR) (KLV-46D300A/46V300A)	

English
2008BL08-Data
Made in Japan
© 2008. 2

Sony EMCS Corporation
Inazawa TEC

9-834-157-04